SWP-27-2306

PROJECT NAME

CITY OF RENTON
NE 5TH PL / EDMONDS AVE NE
STORM SYSTEM IMPROVEMENT PROJECT SWP-27-2306
and
NE 5TH PL WATER MAIN REPLACEMENT PROJECT
WTR-27-3673

STORM DRAWINGS

1. COVER SHEET
2. NE 6TH PL STA 13+50 to 16+20
3. NE 6TH PL STA 16+20 to 19+20
4. NE 6TH PL STA 19+20 to 20+80
   NE 6TH PL STUB
5. CAMAS AVE STA 20+80 to 23+80
6. CAMAS AVE STA 23+80 to 27+50
7. CAMAS AVE STA 27+50 to 31+10
8. CAMAS AVE STA3 1+10 to 32+12
   NE 6TH PL /EDMONDS AVE STUB
9. EDMONDS AVE STA 32+12 to 35+70
10. EDMONDS AVE STA 35+70 to 37+65
11. NE 5TH PL STA 37+65 to 41+40
12. NE 5TH PL STA 41+40 to 43+05
13. NE 5TH PL STA 43+05 to 45+65
14. PAVING PHASING
15. STORM DETAILS

WATER DRAWINGS

1. EDMONDS AVE/NE 5TH PL STA 35+70 to 38+50
2. NE 5TH PL STA 38+50 to 44+00
3. NE 5TH PL STA 44+00 to 48+8.
4. CONNECTION DETAILS
5. CONNECTION DETAILS

ORIGINAL SURVEY, for Reference ONLY

S1. ABERDEEN/NE 6TH
S2. NE 6TH PL
S3. CAMAS AVE NE
S4. CAMAS AVE NE
S5. EDMONDS AVE NE
S6. NE 5TH PL
S7. NE 5TH PL

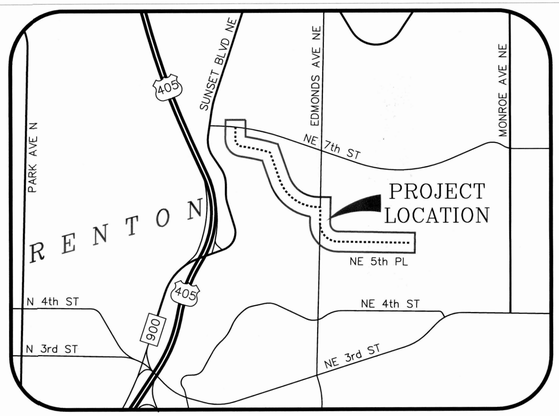

VICINITY MAP
SCALE: 1"=1000'±

LEGEND

ADS	PLASTIC PIPE	IE	INVERT ELEVATION
	AREA DRAIN		FIRE DEPT. CONNECTION (FDC)
ABAN/RET	ABANDONED/RETIRED		LIGHT POLE (METAL)
	ASPHALT (ASPH)		LIGHT POLE (WOOD)
	BRICK SURFACE		LIGHT POLE (ORNAMENTAL)
	BUILDING LINE	LSCAPE	LANDSCAPE PLANTER
BC	BUILDING CORNER		MANHOLE
	BOLLARD	O/H	OVERHEAD
	CANOPY	O/H P&T	OVERHEAD POWER/TELEPHONE
	CATCH BASIN (CB)	PL	PROPERTY LINE
	CONCRETE SURFACE (CONC)	(P)	PAINTED UTILITY LOCATION
CW/BW	CONCRETE/BRICK WALK	PPS	PARKING PAY STATION
CRW	CONCRETE RETAINING WALL	PIV	POST-INDICATOR VALVE
CC/XC	CONCRETE/EXTRUDED CURB	PS/PSS	COMBINED/SANITARY SEWER
CP/IP	CONC./IRON PIPE	PSD	PIPE STORM DRAIN
	CHAIN LINK FENCE (CLF)		PRIVATE CATCH BASIN
CTV	CABLE TV		GRAVEL SURFACE
COL	COLUMN		ROCKERY
CS	CONC. STAIRS	RE	ROOF ELEVATION
	H/C PARKING SPACE	SCL/CL	SEATTLE CITY LIGHT HANDHOLE
CON	CONIFEROUS TREE	SD	SERVICE DRAIN (STORM)
DEC	DECIDUOUS TREE	SD/SSCO	STORM/SEWER CLEANOUT
DWY	DRIVEWAY	SSS	SANITARY SIDE SEWER (RECORD)
ECd	ELECTRICAL CONDUIT (BURIED)		SIGN/STREET NAME SIGN
	CENTERLINE/MONUMENT LINE	TBM	TEMPORARY BENCHMARK
EHH	ELECTRICAL HANDHOLE	TCd	TELEPHONE CONDUIT (BURIED)
EM	ELECTRICAL METER	TV	TELEPHONE VAULT
EMH	ELECTRICAL MANHOLE	TMH	TELEPHONE MANHOLE
EV/ET	ELECTRICAL VAULT/TRANSFORMER	TS	TELEPHONE SENTRY
	FOUND MONUMENT IN CASE		TRAFFIC FLOW DIRECTION
	FIRE HYDRANT	TOE	TOE OF SLOPE
FFE	FINISHED FLOOR ELEVATION	TOP	TOP OF BANK
G	GAS MAIN	UPO	UTILITY POLE (WOOD)
GM	GAS METER	WV	WATER VAULT
	GAS VALVE	W	WATER MAIN
GV	GAS VAULT	WM	WATER METER
	GUY ANCHOR		WATER VALVE
			WATER GATE VALVE/ CHAMBER

SITE BENCH MARKS

BENCH MARK "A"
NAIL IN S. FACE P.P. N. SIDE INTX.
N.E. 5th PL. & HARRINGTON AVE. N.E.
ELEV.=295.05

BENCH MARK "B"
TOP CTR. BOLT F.H. N.W.C. INTX. N.E.
5th PL. & FERNDALE AVE. N.E.
ELEV =291.51

BENCH MARK "C"
NAIL IN N.E. FACE P.P. IN MEDIAN AT
INTX. N.E. 5th PL. & EDMONDS AVE. N.E.
ELEV.=283.46

BENCH MARK "D"
NAIL IN N.E. FACE P.P. AT S.W.C. INTX.
CAMAS AVE. N.E. & N.E. EDMONDS AVE. N.E.
ELEV=284.03

BENCH MARK "E"
NAIL IN N.E. FACE P.P. AT W. SIDE CAMAS AVE.
N.E. BETWEEN #613 & #617 CAMAS AVE. N.E.
ELEV=268.20

BENCH MARK "F"
N.E. BONNET BOLT F.H. S. SIDE BLAIN AVE. N.E.
W. SIDE OF CAMAS AVE. N.E.
ELEV=256.67

BENCH MARK "G"
TOP CTR. BOLT F.H. AT N. SIDE N.E. 6th PL.
IN FRONT OF 2220 N.E. 6th PL.
ELEV=249.49

BENCH MARK "H"
RR SPIKE IN N. FACE P.P. S. SIDE N.E. 6th PL.
IN FRONT OF 2205 N.E. 6th PL.
ELEV=222.97

BENCH MARK "J"
RR SPIKE IN N.W. FACE P.P. AT S.W.C.
N. 7th ST. & ABERDEEN AVE. N.E.
ELEV=213.85

BENCH MARK "K"
TOP CTR. BOLT F.H. AT S.E.C. 5th PL. N.E.
& INDEX AVE. N.E.
ELEV=298.77

CHECKED FOR COMPLIANCE TO CITY STANDARDS
Ronald J. Strake Date 9/6/13
Andrew Weygandt Date 9/6/13
Date

RECOMMENDED FOR APPROVAL
BY DANIEL CAREY 9/4/13
BY ANDREW WEYGANDT 9/4/13

RONALD J. STRAKE STATE OF WASHINGTON 25727 REGISTERED PROFESSIONAL ENGINEER
9/6/13

D-230601

BUSH, ROED & HITCHINGS, INC.
CIVIL ENGINEERS & LAND SURVEYORS
2009 MINOR AVE. EAST
SEATTLE, Washington
98102-3513
(206) 323-4144
1-800-935-0508
FAX# (206) 323-7135
E-MAIL: info@brhinc.com

NO.	REVISION	BY	DATE	APPR

SURVEYED: BRH
DESIGNED: DWC, AW
DRAWN: DWC, AW
CHECKED: DWC, RJS, AW, AG
APPROVED: RJS, AG

SCALE: As Noted
ONE INCH AT FULL SCALE IF NOT ONE INCH SCALE ACCORDINGLY

VERTICAL: NAVD 1988
HORIZONTAL: NAD 1983/1991
DATUM

CITY OF RENTON
Planning/Building/Public Works Dept.

NE 5TH PL / EDMONDS AVE NE
STORM SYSTEM REPLACEMENT PROJECT
COVER

DATE: 9-4-13
FIELDBOOK:
PAGE:
DRAWING NO: 2013009.00
SHEET: 1 OF x

D-2306

FILENAME: U:\JOB\2013009\DWG\VIS-SUR.dwg

DRAWING NUMBER
NEW HOPE, MINNESOTA
SAFECO PRODUCTS
REORDER BY PART NUMBER 15052

SWP-27-2306
STORM SYSTEM IMPROVEMENT PROJECT
NE 5th Pl/Edmonds Ave NE
Page 01

DRAWING NUMBER
NEW HOPE, MINNESOTA
SAFECO PRODUCTS
REORDER BY PART NUMBER 15052

SWP-27-2306

PROJECT NAME

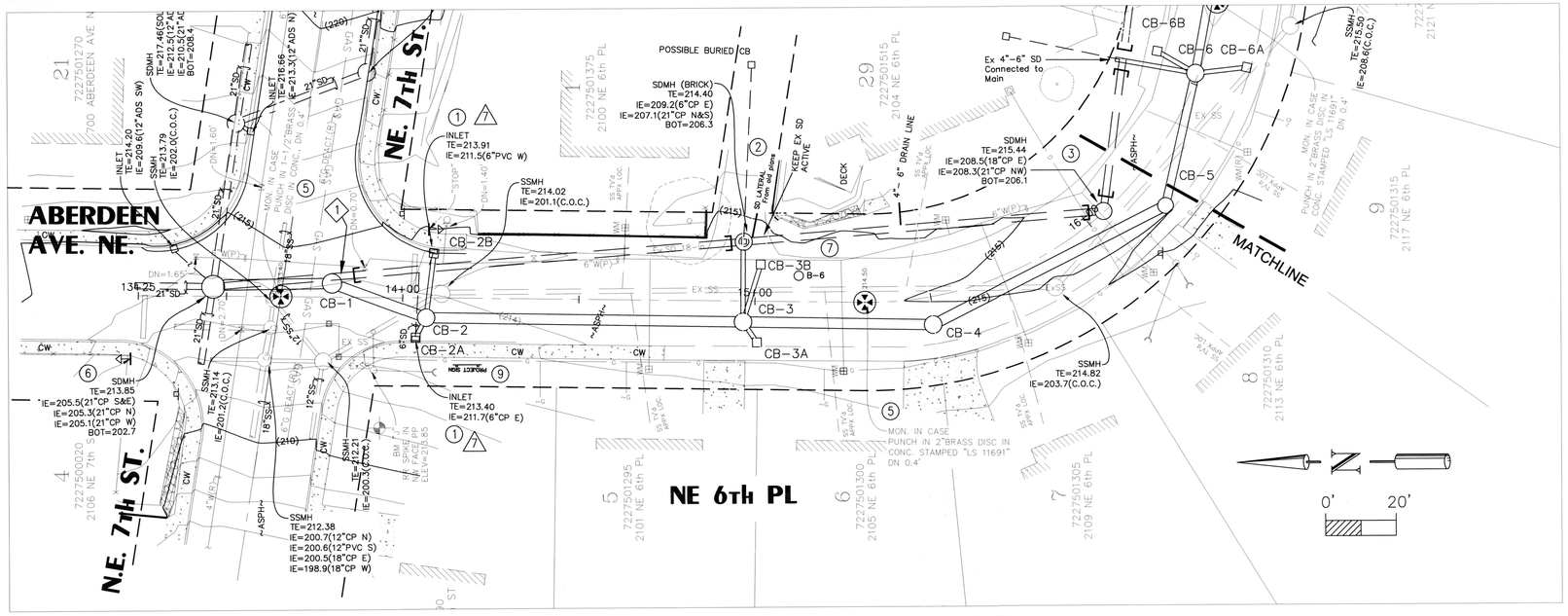

PROFILE ALONG STREET CENTERLINE SCALE: Horz. 1" = 20' Vert. 1" = 5'

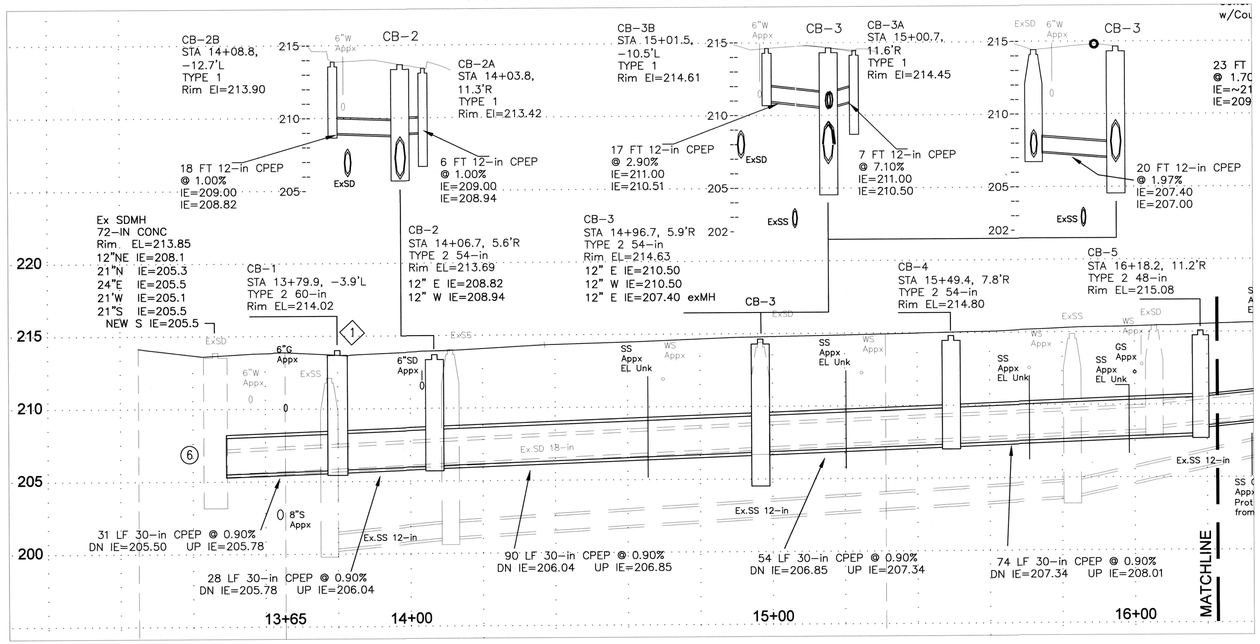

RECOMMENDED FOR APPROVAL
BY DANIEL CAREY 9/4/13
BY _____

RONALD J. STAPLES STATE OF WASHINGTON 20779 REGISTERED PROFESSIONAL ENGINEER 9/6/13

BUSH, ROED & HITCHINGS, INC.
CIVIL ENGINEERS & LAND SURVEYORS
2009 MINOR AVE. EAST
SEATTLE, Washington
98102-3513
(206) 323-4144
1-800-935-0508
FAX# (206) 323-7135
E-MAIL: info@bhinc.com

FILENAME: U:\LDD\2013009\DWG\XS-SUR.dwg

NO.	REVISION	BY	DATE	APPR

SURVEYED: BRH
DESIGNED: DWC
DRAWN: DWC
CHECKED: DWC, RJS
APPROVED: RJS

SCALE: As Noted
ONE INCH AT FULL SCALE IF NOT ONE INCH SCALE ACCORDINGLY

VERTICAL: NAVD 1988
HORIZONTAL: NAD 1983/1991
DATUM

CITY OF RENTON
Planning/Building/Public Works Dept.

NE 5TH PL / EDMONDS AVE NE
STORM SYSTEM REPLACEMENT PROJECT
NE 6th PL STA 13+50 to STA 16+20

DATE: 9-4-13
FIELDBOOK:
PAGE:
DRAWING NO: 2013009.00
SHEET: 2 OF: x

D-2306

CALL 48 HOURS BEFORE YOU DIG
811

EXISTING UTILITY LOCATIONS ARE APPROXIMATE,
NOT ALL UTILTIES MAY BE SHOWN.
CONTRACTOR IS RESPONSIBLE FOR LOCATING ALL UTILITIES.

GENERAL NOTES

1. OVERHEAD UTILITY LINES NOT SHOWN.
2. DO NOT BLOCK DRIVEWAYS EXCEPT WHEN INSTALLING NEW STORM SYSTEM IN FRONT OF THEM.
3. PROTECT/SAVE ANY TREES, PLANTS, LANDSCAPING, MAILBOXES, FENCES AND OTHER IMPROVEMENTS IN CONSTR AREA. RESTORE/REPLACE AFTER CONSTRUCTION.
4. SIDE SEWER LOCATIONS ARE APPROX AND MAY VARY FROM LOCATION SHOWN.
5. SIDE SEWERS IN CONFLICT WITH NEW STORM LINE SHALL BE REBUILT PER SIDE SEWER RELOCATION DETAIL.
6. PIPE LENGTHS, SLOPES ARE MEASURED FROM CENTER OF STRUCTURES.
7. ALL CB RIMS AND GRATES SHALL MATCH EXISTING GRADE UNLESS NOTED OTHERWISE.
8. TYPE 2 CB"s SHALL BE RING AND COVER UNLESS NOTED OTHERWISE. TYPE 2 CB AS SHOWN ON PROFILE: 2-FT SUMP, OR NO SUMP. TYPE 2 CB MAINLINE IE's GIVEN ON PIPE CALLOUTS.
9. TYPE 1 CB's SHALL BE FRAME AND VANED GRATE UNLESS NOTED OTHERWISE. TYPE 1 CB AS SHOWN ON PROFILE: 2-FT SUMP, OR CONCRETE INLET. ADJUST CB LOCATION & RIM EL AS NEEDED TO DRAIN, CONFIRM w/INSPECTOR.
10. KEEP ALL EX CB INLETS ACTIVE UNTIL REPLACED BY NEW TYPE 1 CB'S.
11. CONTRACTOR SHALL PROVIDE TEMP STORMWATER BYPASS/PUMPING AS NEEDED.

[= PLUG EX PIPE

CONSTRUCTION NOTES

(1) 1. TEMP EROSION CONTROL: INSTALL CATCH BASIN FILTER FABRIC PER STD PLAN 216.30 AT ALL EX CB'S AND AT NEW CB's WHERE EARTHWORK OCCURS. INSTALL SILT FENCING WHERE NEEDED OR DIRECTED BY CITY.
(2) 2. CONNECT NEW STORM SYSTEM TO EX STORM SYSTEM.
(3) 3. ABANDON EX SD CATCH BASIN TYPE 2 AFTER FLOW IS TRANSFERRED TO NEW STORM SYSTEM.
(4) 4. ABANDON EX SD CATCH BASIN TYPE 1.
(5) 5. REPLACE STREET MONUMENT, IF DAMAGED.
(6) 6. CORE DRILL EX SDMH FOR NEW STORM CONNECTION.
(7) 7. ABANDON BORING/MONITORING WELL, B-1 THRU B-6.
(8) 8. POTHOLE UTILTIY AND SURVEY LOCATION AND ELEVATION. DETERMINE CLEARANCE FROM NEW SD.
(9) 9. PROJECT SIGN.
(20) 20. SEWER TEE REPLACEMENT, SEE DETAIL AND SEWER SCHEDULE. CONTRACTOR TO VERIFY LOCATION OF TEES PRIOR TO EXCAVATION.

RESTORATION NOTES

1. PROTECT/SAVE ANY PLANTS, LANDSCAPING, MAILBOXES, FENCES AND OTHER IMPROVEMENTS IN CONSTR AREA. RESTORE/REPLACE AFTER CONSTRUCTION.
(2) 2. ALL DISTURBED GRASS AREA SHALL BE RESTORED WITH SOD.
(3) 3. ALL DISTURBED GRAVEL AREAS SHALL BE RESTORED WITH CRUSHED SURFACE BASE COURSE (WSDOT 9-03.9(3)).
4. TRENCH PATCH SHALL BE PER DETAIL TYPICAL PATCH FOR FLEXIBLE PAVEMENT (PER STD PLAN 110).
5. CITY MAY REQUIRE DAMAGED ASPHALT OUTSIDE OF TRENCH PATCH AREA TO BE REMOVED AND REPLACED, AS NEEDED.
6. ALL CURB, GUTTER, SIDEWALK, AND DRIVEWAY RESTORATION SHALL MATCH EXISTING TYPE AND DIMENSIONS, UNLESS NOTED OTHERWISE. SAWCUT EXTENT AS DIRECTED BY CITY.
(7) 7. RESTORE CONC CURB, GUTTER, SIDEWALK.
(8) 8. RESTORE CONC SIDEWALK (ASPHALT CURB OR NO CURB).
(9) 9. RESTORE CONC DRIVEWAY (ASPHALT CURB OR NO CURB).

SHEET NOTES

(1) 1. PROVIDE TEMP CONNECTION OF EX SD TO NEW CB. PROVIDE TEMP DAM/SEAL TO PREVENT BACKFLOW INTO NEW PIPE AND CONSTRUCTION AREA.

D-230602

DRAWING NUMBER
SWP-27-2306
STORM SYSTEM IMPROVEMENT PROJECT
NE 5th Pl/Edmonds Ave NE
Page 02

SWP-27-2306

PROJECT NAME

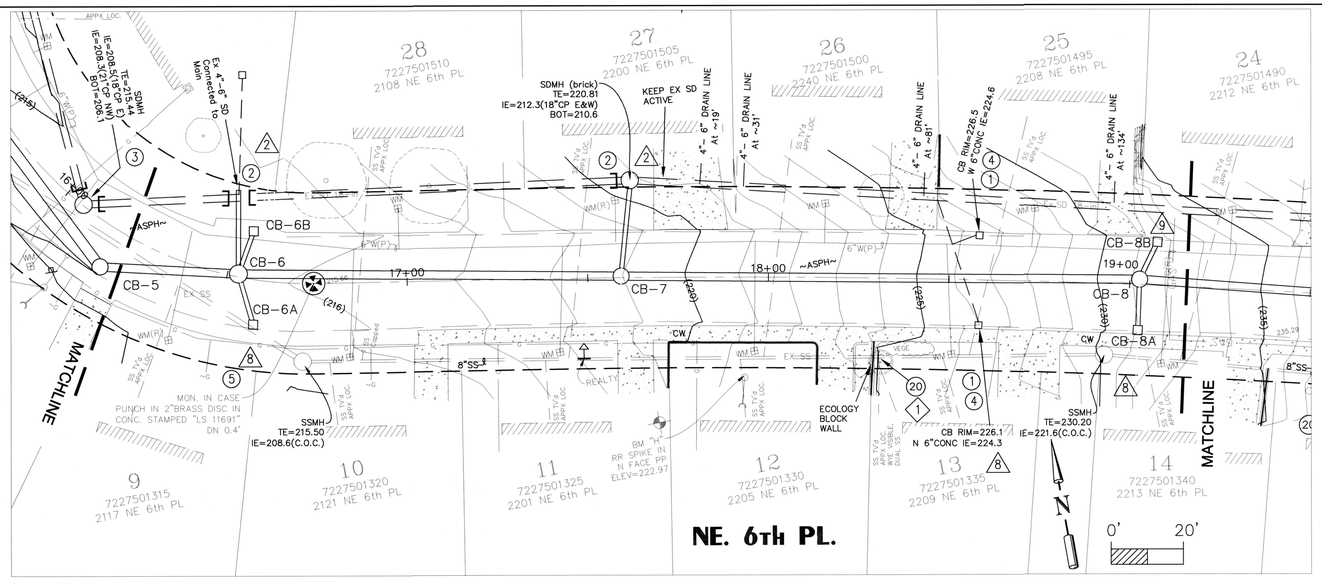

PROFILE ALONG STREET CENTERLINE SCALE: Horz. 1" = 20' Vert. 1" = 5'

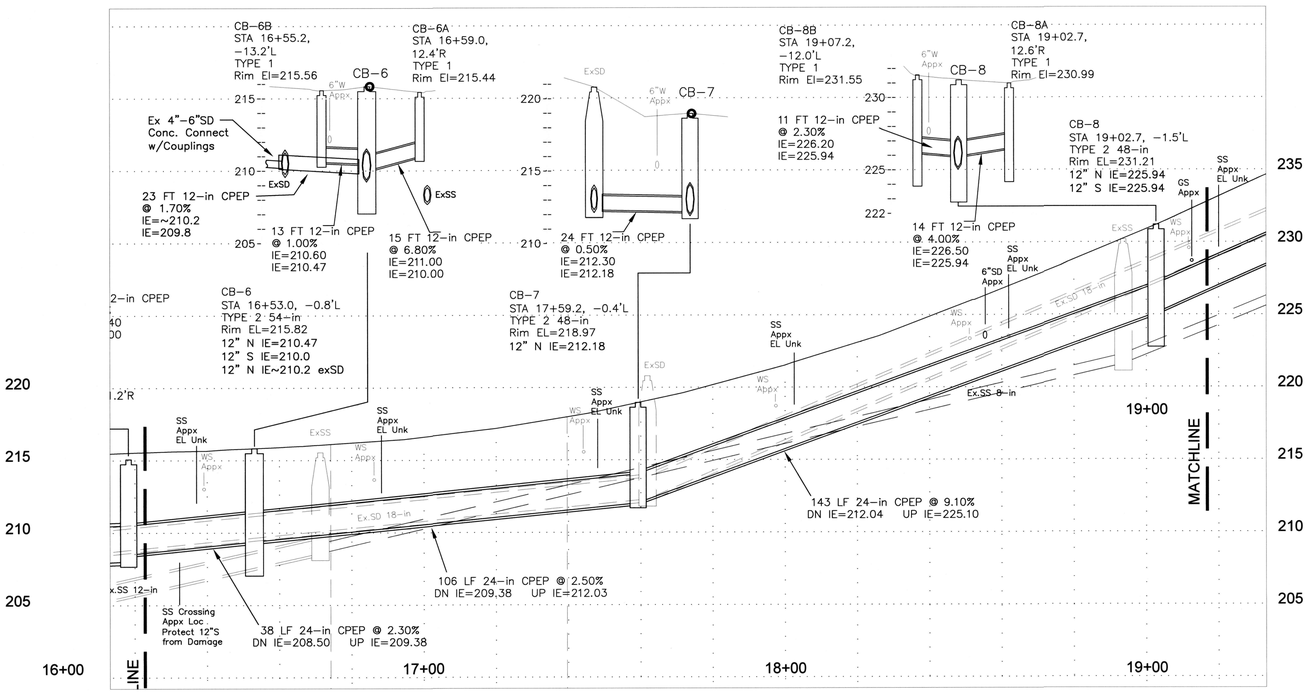

RECOMMENDED FOR APPROVAL
BY DANIEL CAREY 9/4/13
BY _____

RONALD J. STRAKA — STATE OF WASHINGTON — 20737 — REGISTERED PROFESSIONAL ENGINEER
9/6/13

BUSH, ROED & HITCHINGS, INC.
CIVIL ENGINEERS & LAND SURVEYORS
2009 MINOR AVE. EAST
SEATTLE, Washington
98102–3513
(206) 323–4144
1–800–935–0508
FAX# (206) 323–7135
E–MAIL: info@brhinc.com

FILENAME: U:\LDD\2013009\DWG\XS-SUR.dwg

NO.	REVISION	BY	DATE	APPR

SURVEYED: BRH
DESIGNED: DWC
DRAWN: DWC
CHECKED: DWC, RJS
APPROVED: RJS

SCALE: As Noted
ONE INCH AT FULL SCALE IF NOT ONE INCH SCALE ACCORDINGLY

VERTICAL: NAVD 1988
HORIZONTAL: NAD 1983/1991
DATUM

CITY OF RENTON
Planning/Building/Public Works Dept.

NE 5TH PL / EDMONDS AVE NE
STORM SYSTEM REPLACEMENT PROJECT
NE 6th PL STA 16+20 to STA 19+20

DATE: 9–4–13
FIELDBOOK:
PAGE:
DRAWING NO: 2013009.00
SHEET: 3 OF: x

D–2306

CALL 48 HOURS BEFORE YOU DIG
811

EXISTING UTILITY LOCATIONS ARE APPROXIMATE,
NOT ALL UTILTIES MAY BE SHOWN.
CONTRACTOR IS RESPONSIBLE FOR LOCATING ALL UTILITIES.

GENERAL NOTES

1. OVERHEAD UTILITY LINES NOT SHOWN.
2. DO NOT BLOCK DRIVEWAYS EXCEPT WHEN INSTALLING NEW STORM SYSTEM IN FRONT OF THEM.
3. PROTECT/SAVE ANY TREES, PLANTS, LANDSCAPING, MAILBOXES, FENCES AND OTHER IMPROVEMENTS IN CONSTR AREA. RESTORE/REPLACE AFTER CONSTRUCTION.
4. SIDE SEWER LOCATIONS ARE APPROX AND MAY VARY FROM LOCATION SHOWN.
5. SIDE SEWERS IN CONFLICT WITH NEW STORM LINE SHALL BE REBUILT PER SIDE SEWER RELOCATION DETAIL.
6. PIPE LENGTHS, SLOPES ARE MEASURED FROM CENTER OF STRUCTURES.
7. ALL CB RIMS AND GRATES SHALL MATCH EXISTING GRADE UNLESS NOTED OTHERWISE.
8. TYPE 2 CB"s SHALL BE RING AND COVER UNLESS NOTED OTHERWISE.
   TYPE 2 CB AS SHOWN ON PROFILE: 2–FT SUMP, OR NO SUMP.
   TYPE 2 CB MAINLINE IE's GIVEN ON PIPE CALLOUTS.
9. TYPE 1 CB's SHALL BE FRAME AND VANED GRATE UNLESS NOTED OTHERWISE.
   TYPE 1 CB AS SHOWN ON PROFILE: 2–FT SUMP, OR CONCRETE INLET.
   ADJUST CB LOCATION & RIM EL AS NEEDED TO DRAIN, CONFIRM w/INSPECTOR.
10. KEEP ALL EX CB INLETS ACTIVE UNTIL REPLACED BY NEW TYPE 1 CB'S.
11. CONTRACTOR SHALL PROVIDE TEMP STORMWATER BYPASS/PUMPING AS NEEDED.

[= PLUG EX PIPE

CONSTRUCTION NOTES

(1) 1. TEMP EROSION CONTROL: INSTALL CATCH BASIN FILTER FABRIC PER STD PLAN 216.30 AT ALL EX CB'S AND AT NEW CB's WHERE EARTHWORK OCCURS. INSTALL SILT FENCING WHERE NEEDED OR DIRECTED BY CITY.
(2) 2. CONNECT NEW STORM SYSTEM TO EX STORM SYSTEM.
(3) 3. ABANDON EX SD CATCH BASIN TYPE 2 AFTER FLOW IS TRANSFERRED TO NEW STORM SYSTEM.
(4) 4. ABANDON EX SD CATCH BASIN TYPE 1.
(5) 5. REPLACE STREET MONUMENT, IF DAMAGED.
(6) 6. CORE DRILL EX SDMH FOR NEW STORM CONNECTION.
(7) 7. ABANDON BORING/MONITORING WELL, B–1 THRU B–6.
(8) 8. POTHOLE UTILTIY AND SURVEY LOCATION AND ELEVATION. DETERMINE CLEARANCE FROM NEW SD.
(9) 9. PROJECT SIGN.
(20) 20. SEWER TEE REPLACEMENT, SEE DETAIL AND SEWER SCHEDULE. CONTRACTOR TO VERIFY LOCATION OF TEES PRIOR TO EXCAVATION.

RESTORATION NOTES

1. PROTECT/SAVE ANY PLANTS, LANDSCAPING, MAILBOXES, FENCES AND OTHER IMPROVEMENTS IN CONSTR AREA. RESTORE/REPLACE AFTER CONSTRUCTION.
(2) 2. ALL DISTURBED GRASS AREA SHALL BE RESTORED WITH SOD.
(3) 3. ALL DISTURBED GRAVEL AREAS SHALL BE RESTORED WITH CRUSHED SURFACE BASE COURSE (WSDOT 9–03.9(3)).
4. TRENCH PATCH SHALL BE PER DETAIL TYPICAL PATCH FOR FLEXIBLE PAVEMENT (PER STD PLAN 110).
5. CITY MAY REQUIRE DAMAGED ASPHALT OUTSIDE OF TRENCH PATCH AREA TO BE REMOVED AND REPLACED, AS NEEDED.
6. ALL CURB, GUTTER, SIDEWALK, AND DRIVEWAY RESTORATION SHALL MATCH EXISTING TYPE AND DIMENSIONS, UNLESS NOTED OTHERWISE. SAWCUT EXTENT AS DIRECTED BY CITY.
(7) 7. RESTORE CONC CURB, GUTTER, SIDEWALK.
(8) 8. RESTORE CONC SIDEWALK (ASPHALT CURB OR NO CURB).
(9) 9. RESTORE CONC DRIVEWAY (ASPHALT CURB OR NO CURB).

SHEET NOTES

(1) 1. EXISTING CONNECTION MAY BE A DUAL SIDE SEWER. IF SO, SEPARATE BY INSTALLING INDIVIDUAL SEWER TEES AT THE MAIN FOR EACH SIDE SEWER.

D-230603

DRAWING NUMBER

SAFECO PRODUCTS • NEW HOPE, MINNESOTA
REORDER FROM YOUR SAFECO DEALER OR CALL 1-800-328-1362

DRAWING NUMBER

SAFECO PRODUCTS • NEW HOPE, MINNESOTA
REORDER FROM YOUR SAFECO DEALER OR CALL 1-800-328-1362

SWP-27-2306
STORM SYSTEM IMPROVEMENT PROJECT
NE 5th Pl/Edmonds Ave NE
Page 03

DRAWING

SAFECO PRODUCTS
REORDER FROM

SWP-27-2306

PROJECT NAME

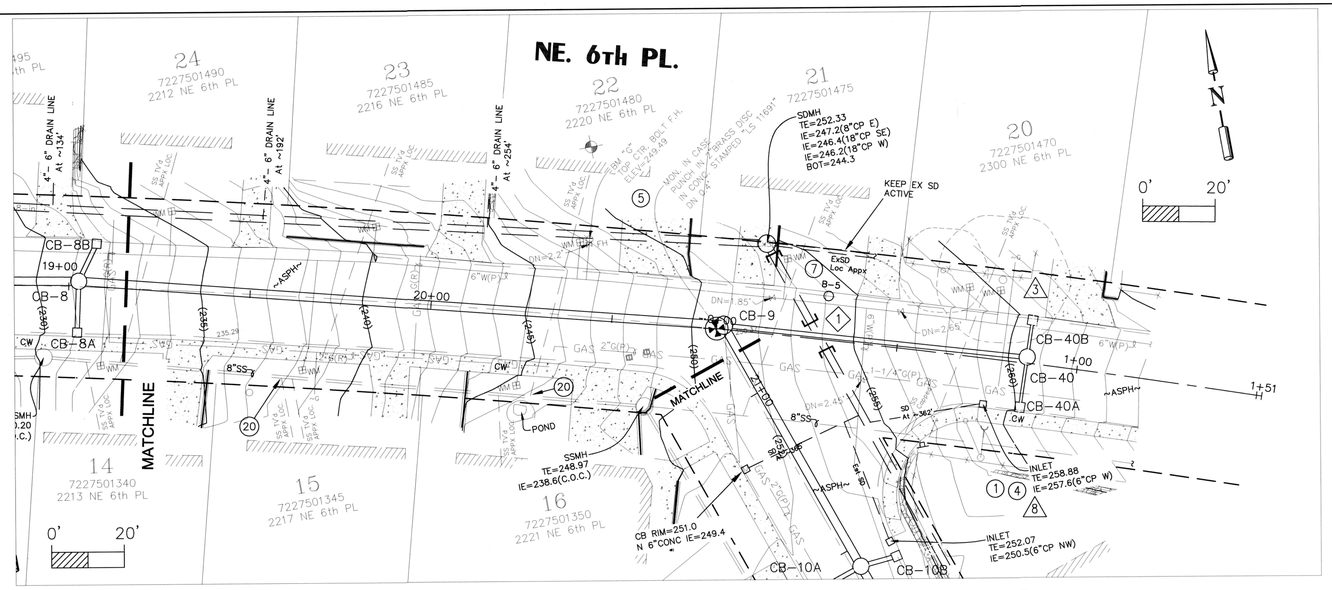

PROFILE ALONG STREET CENTERLINE SCALE: Horz. 1" = 20' Vert. 1" = 5'

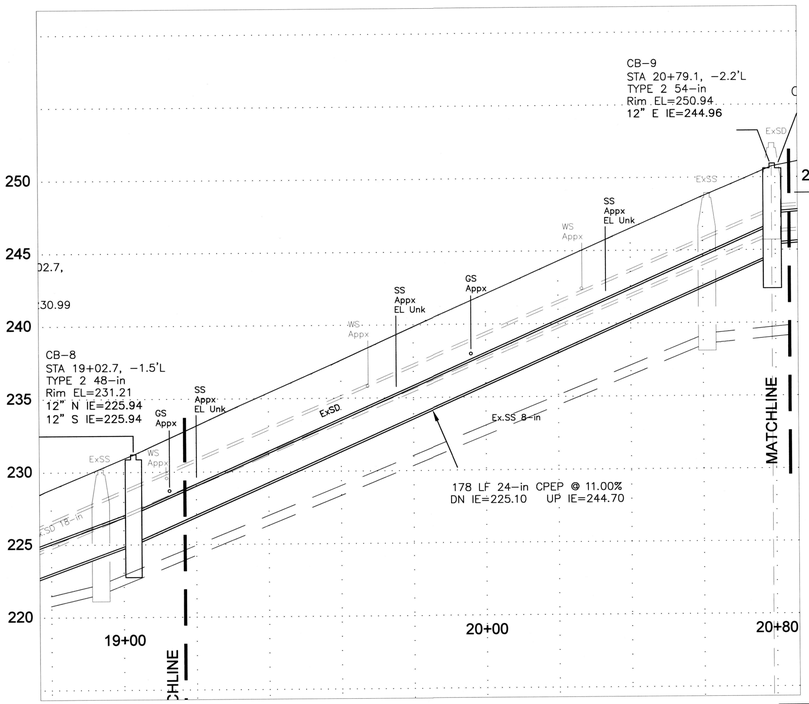

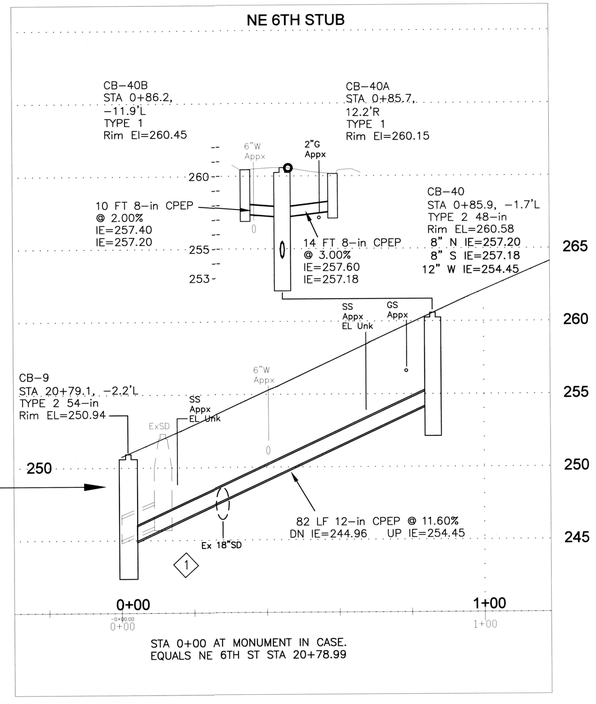

RECOMMENDED FOR APPROVAL
BY DANIEL CAREY 9/4/13
BY _____

BUSH, ROED & HITCHINGS, INC.
CIVIL ENGINEERS & LAND SURVEYORS
2009 MINOR AVE. EAST
SEATTLE, Washington
98102–3513
(206) 323–4144
1–800–935–0508
FAX# (206) 323–7135
E–MAIL: info@brhinc.com

RONALD J. STRAUB STATE OF WASHINGTON 25727 REGISTERED PROFESSIONAL ENGINEER 9/6/13

NO.	REVISION	BY	DATE	APPR

SURVEYED: BRH
DESIGNED: DWC
DRAWN: DWC
CHECKED: DWC, RJS
APPROVED: RJS

SCALE: As Noted
ONE INCH AT FULL SCALE IF NOT ONE INCH, SCALE ACCORDINGLY

VERTICAL: NAVD 1988
HORIZONTAL: NAD 1983/1991
DATUM

CITY OF RENTON
Planning/Building/Public Works Dept.

NE 5TH PL / EDMONDS AVE NE
STORM SYSTEM REPLACEMENT PROJECT
NE 6th PL STA 19+20 to STA 20+80
NE 6th STUB STA 0+00 to STA 1+00

DATE: 9–4–13
FIELDBOOK:
PAGE:
DRAWING NO: 2013009.00
SHEET: 4 OF: x
D–2306

FILENAME: e:\swp\sr\sr-xs\dwg\xs0300.dgn

CALL 48 HOURS BEFORE YOU DIG
811

EXISTING UTILITY LOCATIONS ARE APPROXIMATE,
NOT ALL UTILTIES MAY BE SHOWN.
CONTRACTOR IS RESPONSIBLE FOR LOCATING ALL UTILITIES.

GENERAL NOTES

1. OVERHEAD UTILITY LINES NOT SHOWN.
2. DO NOT BLOCK DRIVEWAYS EXCEPT WHEN INSTALLING NEW STORM SYSTEM IN FRONT OF THEM.
3. PROTECT/SAVE ANY TREES, PLANTS, LANDSCAPING, MAILBOXES, FENCES AND OTHER IMPROVEMENTS IN CONSTR AREA. RESTORE/REPLACE AFTER CONSTRUCTION.
4. SIDE SEWER LOCATIONS ARE APPROX AND MAY VARY FROM LOCATION SHOWN.
5. SIDE SEWERS IN CONFLICT WITH NEW STORM LINE SHALL BE REBUILT PER SIDE SEWER RELOCATION DETAIL.
6. PIPE LENGTHS, SLOPES ARE MEASURED FROM CENTER OF STRUCTURES.
7. ALL CB RIMS AND GRATES SHALL MATCH EXISTING GRADE UNLESS NOTED OTHERWISE.
8. TYPE 2 CB"s SHALL BE RING AND COVER UNLESS NOTED OTHERWISE.
   TYPE 2 CB AS SHOWN ON PROFILE: 2–FT SUMP, OR NO SUMP.
   TYPE 2 CB MAINLINE IE's GIVEN ON PIPE CALLOUTS.
9. TYPE 1 CB's SHALL BE FRAME AND VANED GRATE UNLESS NOTED OTHERWISE.
   TYPE 1 CB AS SHOWN ON PROFILE: 2–FT SUMP, OR CONCRETE INLET.
   ADJUST CB LOCATION & RIM EL AS NEEDED TO DRAIN, CONFIRM w/INSPECTOR.
10. KEEP ALL EX CB INLETS ACTIVE UNTIL REPLACED BY NEW TYPE 1 CB'S.
11. CONTRACTOR SHALL PROVIDE TEMP STORMWATER BYPASS/PUMPING AS NEEDED.

[= PLUG EX PIPE

CONSTRUCTION NOTES

(1) 1. TEMP EROSION CONTROL: INSTALL CATCH BASIN FILTER FABRIC PER STD PLAN 216.30 AT ALL EX CB'S AND AT NEW CB's WHERE EARTHWORK OCCURS. INSTALL SILT FENCING WHERE NEEDED OR DIRECTED BY CITY.
(2) 2. CONNECT NEW STORM SYSTEM TO EX STORM SYSTEM.
(3) 3. ABANDON EX SD CATCH BASIN TYPE 2 AFTER FLOW IS TRANSFERRED TO NEW STORM SYSTEM.
(4) 4. ABANDON EX SD CATCH BASIN TYPE 1.
(5) 5. REPLACE STREET MONUMENT, IF DAMAGED.
(6) 6. CORE DRILL EX SDMH FOR NEW STORM CONNECTION.
(7) 7. ABANDON BORING/MONITORING WELL, B–1 THRU B–6.
(8) 8. POTHOLE UTILTIY AND SURVEY LOCATION AND ELEVATION. DETERMINE CLEARANCE FROM NEW SD.
(9) 9. PROJECT SIGN.
(20) 20. SEWER TEE REPLACEMENT, SEE DETAIL AND SEWER SCHEDULE. CONTRACTOR TO VERIFY LOCATIONS OF TEES PRIOR TO EXCAVATION.

RESTORATION NOTES

1. PROTECT/SAVE ANY PLANTS, LANDSCAPING, MAILBOXES, FENCES AND OTHER IMPROVEMENTS IN CONSTR AREA. RESTORE/REPLACE AFTER CONSTRUCTION.
2 2. ALL DISTURBED GRASS AREA SHALL BE RESTORED WITH SOD.
3 3. ALL DISTURBED GRAVEL AREAS SHALL BE RESTORED WITH CRUSHED SURFACE BASE COURSE (WSDOT 9–03.9(3)).
4. TRENCH PATCH SHALL BE PER DETAIL TYPICAL PATCH FOR FLEXIBLE PAVEMENT (PER STD PLAN 110).
5. CITY MAY REQUIRE DAMAGED ASPHALT OUTSIDE OF TRENCH PATCH AREA TO BE REMOVED AND REPLACED, AS NEEDED.
6. ALL CURB, GUTTER, SIDEWALK, AND DRIVEWAY RESTORATION SHALL MATCH EXISTING TYPE AND DIMENSIONS, UNLESS NOTED OTHERWISE. SAWCUT EXTENT AS DIRECTED BY CITY.
7 7. RESTORE CONC CURB, GUTTER, SIDEWALK.
8 8. RESTORE CONC SIDEWALK (ASPHALT CURB OR NO CURB).
9 9. RESTORE CONC DRIVEWAY (ASPHALT CURB OR NO CURB).

SHEET NOTES

1 1. CONSTRUCT NE 6th STUB AFTER FLOW IN EX SD IS TRANFERED TO NEW SD MAIN.

D-230604

SWP-27-2306
STORM SYSTEM IMPROVEMENT PROJECT
NE 5th Pl/Edmonds Ave NE
Page 04

DRAWING NUMBER
SHEET(S) PREPARED BY: • HEIDI LEER, MINNESOTA REGISTRATION NUMBER 60500
DRAWING NUMBER
SHEET(S) PREPARED BY: • HEIDI LEER, MINNESOTA REGISTRATION NUMBER 60500
DRAW
SHEET(S) PREPARED BY
REVIEWED BY

SWP-27-2306

PROJECT NAME

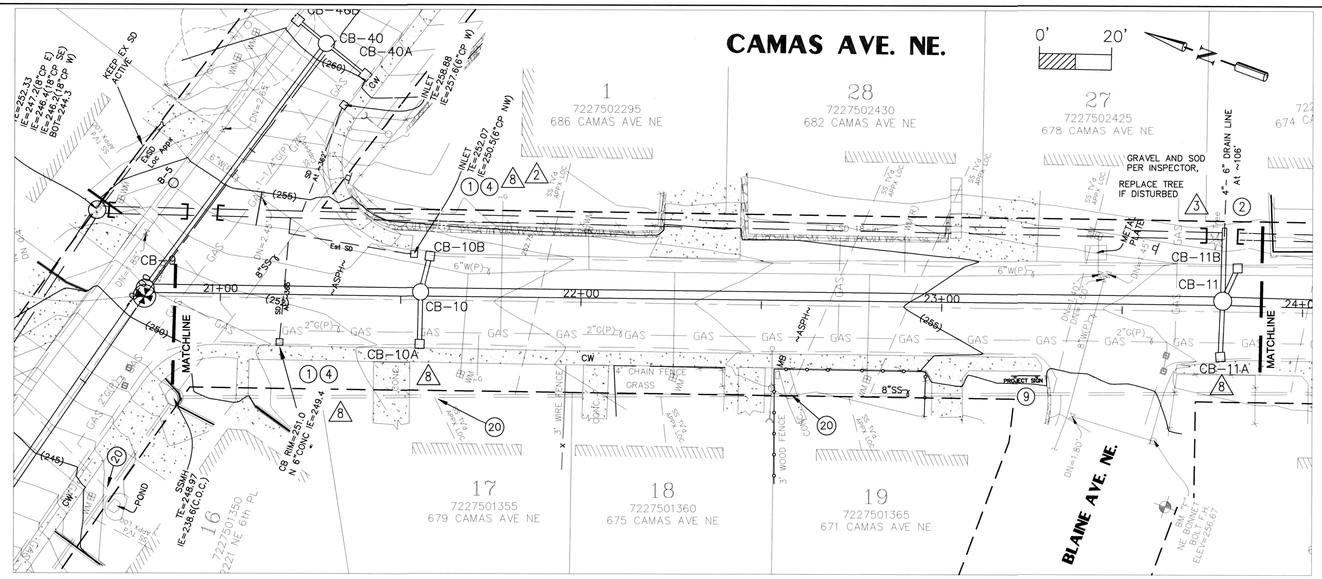

PROFILE ALONG STREET CENTERLINE SCALE: Horz. 1" = 20' Vert. 1" = 5'

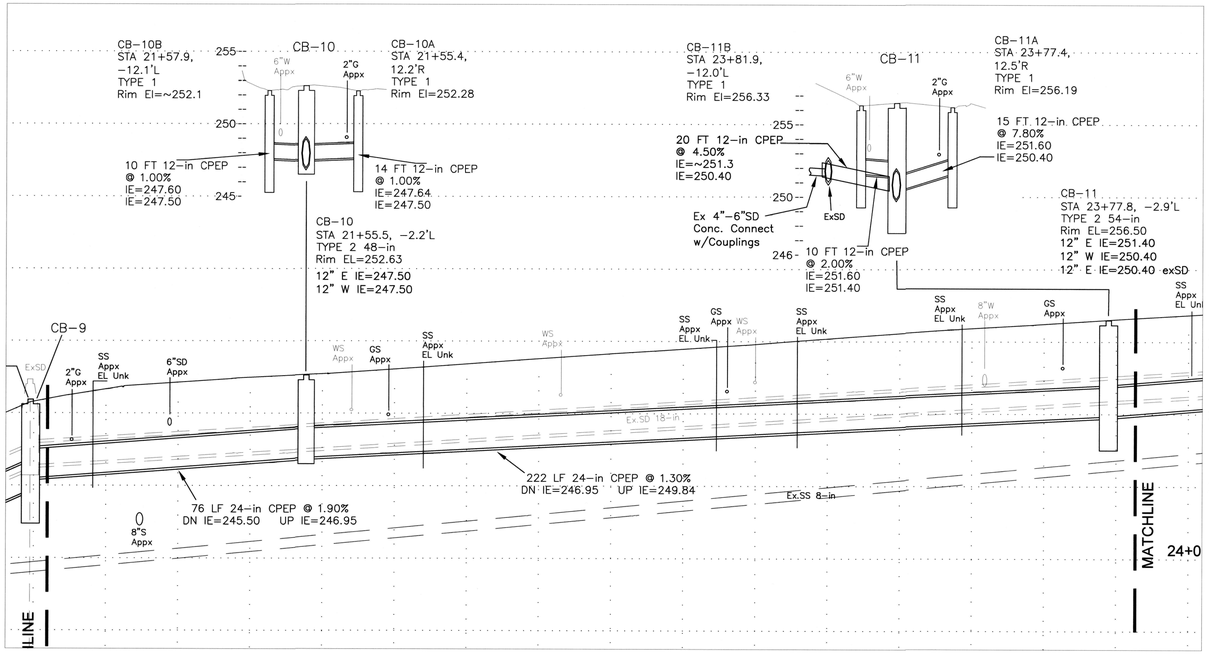

CALL 48 HOURS BEFORE YOU DIG
811

EXISTING UTILITY LOCATIONS ARE APPROXIMATE, NOT ALL UTILTIES MAY BE SHOWN. CONTRACTOR IS RESPONSIBLE FOR LOCATING ALL UTILITIES.

GENERAL NOTES

1. OVERHEAD UTILITY LINES NOT SHOWN.
2. DO NOT BLOCK DRIVEWAYS EXCEPT WHEN INSTALLING NEW STORM SYSTEM IN FRONT OF THEM.
3. PROTECT/SAVE ANY TREES, PLANTS, LANDSCAPING, MAILBOXES, FENCES AND OTHER IMPROVEMENTS IN CONSTR AREA. RESTORE/REPLACE AFTER CONSTRUCTION.
4. SIDE SEWER LOCATIONS ARE APPROX AND MAY VARY FROM LOCATION SHOWN.
5. SIDE SEWERS IN CONFLICT WITH NEW STORM LINE SHALL BE REBUILT PER SIDE SEWER RELOCATION DETAIL.
6. PIPE LENGTHS, SLOPES ARE MEASURED FROM CENTER OF STRUCTURES.
7. ALL CB RIMS AND GRATES SHALL MATCH EXISTING GRADE UNLESS NOTED OTHERWISE.
8. TYPE 2 CB"s SHALL BE RING AND COVER UNLESS NOTED OTHERWISE.
   TYPE 2 CB AS SHOWN ON PROFILE: 2-FT SUMP, OR NO SUMP.
   TYPE 2 CB MAINLINE IE's GIVEN ON PIPE CALLOUTS.
9. TYPE 1 CB's SHALL BE FRAME AND VANED GRATE UNLESS NOTED OTHERWISE.
   TYPE 1 CB AS SHOWN ON PROFILE: 2-FT SUMP, OR CONCRETE INLET.
   ADJUST CB LOCATION & RIM EL AS NEEDED TO DRAIN, CONFIRM w/INSPECTOR.
10. KEEP ALL EX CB INLETS ACTIVE UNTIL REPLACED BY NEW TYPE 1 CB'S.
11. CONTRACTOR SHALL PROVIDE TEMP STORMWATER BYPASS/PUMPING AS NEEDED.

[= PLUG EX PIPE

CONSTRUCTION NOTES

(1) 1. TEMP EROSION CONTROL: INSTALL CATCH BASIN FILTER FABRIC PER STD PLAN 216.30 AT ALL EX CB'S AND AT NEW CB's WHERE EARTHWORK OCCURS. INSTALL SILT FENCING WHERE NEEDED OR DIRECTED BY CITY.
(2) 2. CONNECT NEW STORM SYSTEM TO EX STORM SYSTEM.
(3) 3. ABANDON EX SD CATCH BASIN TYPE 2 AFTER FLOW IS TRANSFERRED TO NEW STORM SYSTEM.
(4) 4. ABANDON EX SD CATCH BASIN TYPE 1.
(5) 5. REPLACE STREET MONUMENT, IF DAMAGED.
(6) 6. CORE DRILL EX SDMH FOR NEW STORM CONNECTION.
(7) 7. ABANDON BORING/MONITORING WELL, B-1 THRU B-6.
(8) 8. POTHOLE UTILTIY AND SURVEY LOCATION AND ELEVATION. DETERMINE CLEARANCE FROM NEW SD.
(9) 9. PROJECT SIGN.
(20) 20. SEWER TEE REPLACEMENT, SEE DETAIL AND SEWER SCHEDULE. CONTRACTOR TO VERIFY LOCATION OF TEES PRIOR TO EXCAVATION.

RESTORATION NOTES

1. PROTECT/SAVE ANY PLANTS, LANDSCAPING, MAILBOXES, FENCES AND OTHER IMPROVEMENTS IN CONSTR AREA. RESTORE/REPLACE AFTER CONSTRUCTION.
(2) 2. ALL DISTURBED GRASS AREA SHALL BE RESTORED WITH SOD.
(3) 3. ALL DISTURBED GRAVEL AREAS SHALL BE RESTORED WITH CRUSHED SURFACE BASE COURSE (WSDOT 9-03.9(3)).
4. TRENCH PATCH SHALL BE PER DETAIL TYPICAL PATCH FOR FLEXIBLE PAVEMENT (PER STD PLAN 110).
5. CITY MAY REQUIRE DAMAGED ASPHALT OUTSIDE OF TRENCH PATCH AREA TO BE REMOVED AND REPLACED, AS NEEDED.
6. ALL CURB, GUTTER, SIDEWALK, AND DRIVEWAY RESTORATION SHALL MATCH EXISTING TYPE AND DIMENSIONS, UNLESS NOTED OTHERWISE. SAWCUT EXTENT AS DIRECTED BY CITY.
(7) 7. RESTORE CONC CURB, GUTTER, SIDEWALK.
(8) 8. RESTORE CONC SIDEWALK (ASPHALT CURB OR NO CURB).
(9) 9. RESTORE CONC DRIVEWAY (ASPHALT CURB OR NO CURB).

SHEET NOTES

(1) 1. –

RECOMMENDED FOR APPROVAL
BY DANIEL CAREY 9/4/13
BY _____

RONALD J. STRAKA STATE OF WASHINGTON 35797 REGISTERED PROFESSIONAL ENGINEER
9/6/13

NO.	REVISION	BY	DATE	APPR

SURVEYED: BRH
DESIGNED: DWC
DRAWN: DWC
CHECKED: DWC, RJS
APPROVED: RJS

SCALE: As Noted
ONE INCH AT FULL SCALE IF NOT ONE INCH SCALE ACCORDINGLY

VERTICAL: NAVD 1988
HORIZONTAL: NAD 1983/1991
DATUM

CITY OF RENTON
Planning/Building/Public Works Dept.

NE 5TH PL / EDMONDS AVE NE
STORM SYSTEM REPLACEMENT PROJECT
CAMAS AVE NE STA 20+80 to STA 23+80

DATE: 9-4-13
FIELDBOOK:
PAGE:
DRAWING NO: 2013009.00
SHEET: 5 OF: x

D-230605

D-2306

BUSH, ROED & HITCHINGS, INC.
CIVIL ENGINEERS & LAND SURVEYORS
2009 MINOR AVE. EAST
SEATTLE, Washington
98102-3513
(206) 323-4144
1-800-935-0508
FAX# (206) 323-7135
E-MAIL: info@bhinc.com

FILENAME: U:\LDD\2013009\DWG\XS-SUR.dwg

SWP-27-2306
STORM SYSTEM IMPROVEMENT PROJECT
NE 5TH PL/Edmonds Ave NE
Page 05

DRAWING NUMBER

SAFECO PRODUCTS • NEW HOPE, MINNESOTA
REORDER BY PART NUMBER 6080

DRAWING NUMBER

SWP-27-2306
STORM SYSTEM IMPROVEMENT PROJECT
NE 5TH PL/Edmonds Ave NE
Page 05

SAFECO PRODUCTS • NEW HOPE, MINNESOTA
REORDER BY PART NUMBER 6080

DRAWI

SWP-27-2306

PROJECT NAME

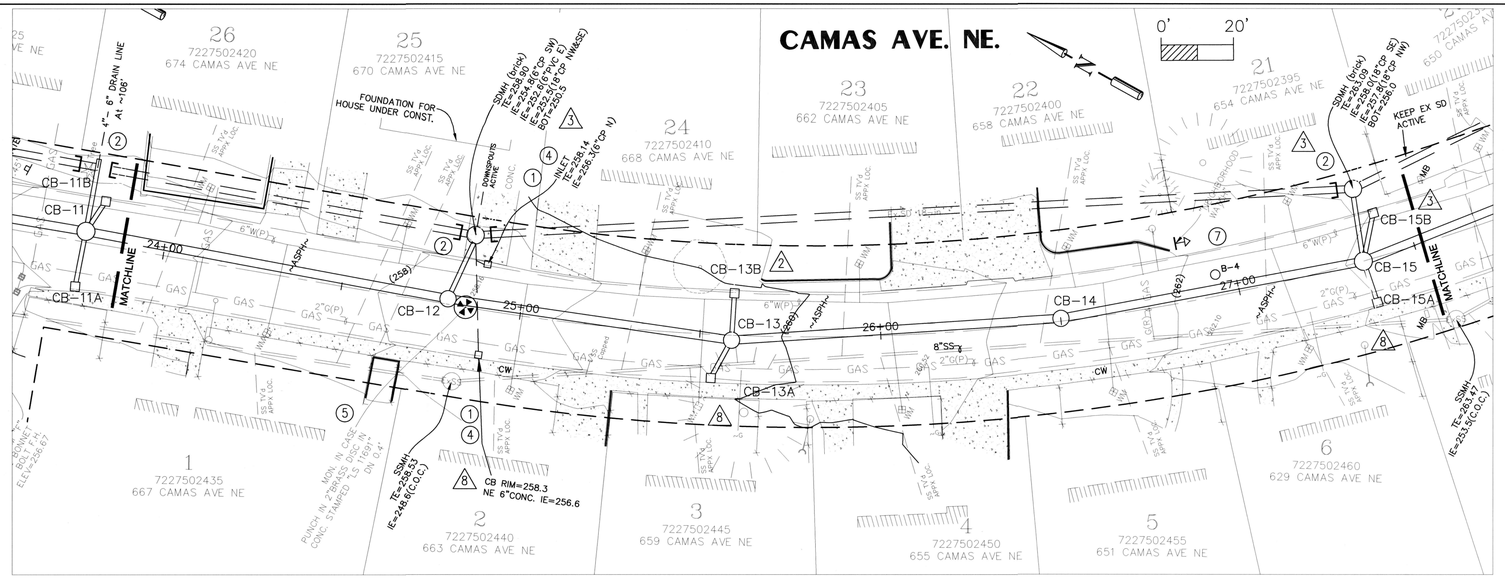

PROFILE ALONG STREET CENTERLINE SCALE: Horz. 1" = 20' Vert. 1" = 5'

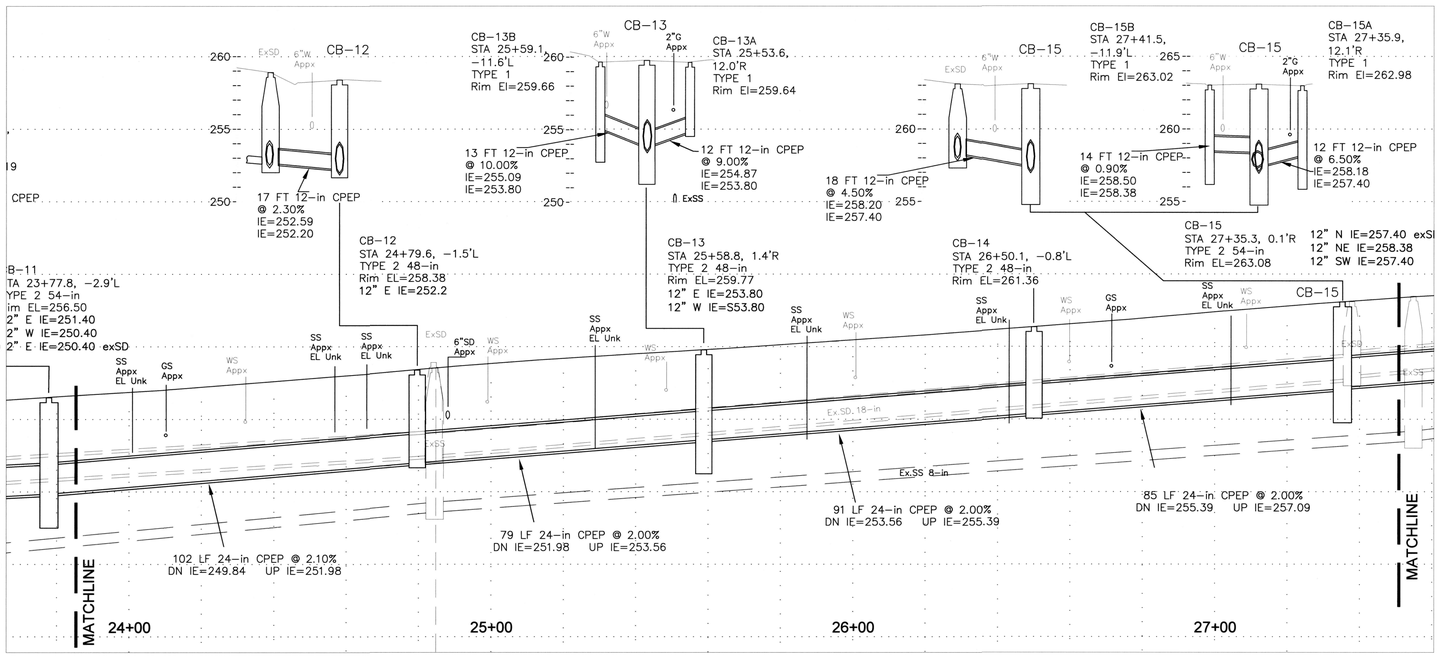

CALL 48 HOURS BEFORE YOU DIG 811

EXISTING UTILITY LOCATIONS ARE APPROXIMATE, NOT ALL UTILTIES MAY BE SHOWN. CONTRACTOR IS RESPONSIBLE FOR LOCATING ALL UTILITIES.

GENERAL NOTES

1. OVERHEAD UTILITY LINES NOT SHOWN.
2. DO NOT BLOCK DRIVEWAYS EXCEPT WHEN INSTALLING NEW STORM SYSTEM IN FRONT OF THEM.
3. PROTECT/SAVE ANY TREES, PLANTS, LANDSCAPING, MAILBOXES, FENCES AND OTHER IMPROVEMENTS IN CONSTR AREA. RESTORE/REPLACE AFTER CONSTRUCTION.
4. SIDE SEWER LOCATIONS ARE APPROX AND MAY VARY FROM LOCATION SHOWN.
5. SIDE SEWERS IN CONFLICT WITH NEW STORM LINE SHALL BE REBUILT PER SIDE SEWER RELOCATION DETAIL.
6. PIPE LENGTHS, SLOPES ARE MEASURED FROM CENTER OF STRUCTURES.
7. ALL CB RIMS AND GRATES SHALL MATCH EXISTING GRADE UNLESS NOTED OTHERWISE.
8. TYPE 2 CB"s SHALL BE RING AND COVER UNLESS NOTED OTHERWISE.
   TYPE 2 CB AS SHOWN ON PROFILE: 2—FT SUMP, OR NO SUMP.
   TYPE 2 CB MAINLINE IE's GIVEN ON PIPE CALLOUTS.
9. TYPE 1 CB's SHALL BE FRAME AND VANED GRATE UNLESS NOTED OTHERWISE.
   TYPE 1 CB AS SHOWN ON PROFILE: 2—FT SUMP, OR CONCRETE INLET.
   ADJUST CB LOCATION & RIM EL AS NEEDED TO DRAIN, CONFIRM w/INSPECTOR.
10. KEEP ALL EX CB INLETS ACTIVE UNTIL REPLACED BY NEW TYPE 1 CB'S.
11. CONTRACTOR SHALL PROVIDE TEMP STORMWATER BYPASS/PUMPING AS NEEDED.

[= PLUG EX PIPE

CONSTRUCTION NOTES

(1) 1. TEMP EROSION CONTROL: INSTALL CATCH BASIN FILTER FABRIC PER STD PLAN 216.30 AT ALL EX CB'S AND AT NEW CB's WHERE EARTHWORK OCCURS. INSTALL SILT FENCING WHERE NEEDED OR DIRECTED BY CITY.
(2) 2. CONNECT NEW STORM SYSTEM TO EX STORM SYSTEM.
(3) 3. ABANDON EX SD CATCH BASIN TYPE 2 AFTER FLOW IS TRANSFERRED TO NEW STORM SYSTEM.
(4) 4. ABANDON EX SD CATCH BASIN TYPE 1.
(5) 5. REPLACE STREET MONUMENT, IF DAMAGED.
(6) 6. CORE DRILL EX SDMH FOR NEW STORM CONNECTION.
(7) 7. ABANDON BORING/MONITORING WELL, B—1 THRU B—6.
(8) 8. POTHOLE UTILTIY AND SURVEY LOCATION AND ELEVATION. DETERMINE CLEARANCE FROM NEW SD.
(9) 9. PROJECT SIGN.
(20) 20. SEWER TEE REPLACEMENT, SEE DETAIL AND SEWER SCHEDULE. CONTRACTOR TO VERIFY LOCATION OF TEES PRIOR TO EXCAVATION.

RESTORATION NOTES

1. PROTECT/SAVE ANY PLANTS, LANDSCAPING, MAILBOXES, FENCES AND OTHER IMPROVEMENTS IN CONSTR AREA. RESTORE/REPLACE AFTER CONSTRUCTION.
(2) 2. ALL DISTURBED GRASS AREA SHALL BE RESTORED WITH SOD.
(3) 3. ALL DISTURBED GRAVEL AREAS SHALL BE RESTORED WITH CRUSHED SURFACE BASE COURSE (WSDOT 9—03.9(3)).
4. TRENCH PATCH SHALL BE PER DETAIL TYPICAL PATCH FOR FLEXIBLE PAVEMENT (PER STD PLAN 110).
5. CITY MAY REQUIRE DAMAGED ASPHALT OUTSIDE OF TRENCH PATCH AREA TO BE REMOVED AND REPLACED, AS NEEDED.
6. ALL CURB, GUTTER, SIDEWALK, AND DRIVEWAY RESTORATION SHALL MATCH EXISTING TYPE AND DIMENSIONS, UNLESS NOTED OTHERWISE. SAWCUT EXTENT AS DIRECTED BY CITY.
(7) 7. RESTORE CONC CURB, GUTTER, SIDEWALK.
(8) 8. RESTORE CONC SIDEWALK (ASPHALT CURB OR NO CURB).
(9) 9. RESTORE CONC DRIVEWAY (ASPHALT CURB OR NO CURB).

SHEET NOTES

(1) 1. —

D-230606

RECOMMENDED FOR APPROVAL
BY DANIEL CAREY 9/4/13
BY _____

RONALD J. STRAUS — STATE OF WASHINGTON — 35227 — REGISTERED PROFESSIONAL ENGINEER
9/6/13

BUSH, ROED & HITCHINGS, INC.
CIVIL ENGINEERS & LAND SURVEYORS
2009 MINOR AVE. EAST
SEATTLE, Washington
98102-3513
(206) 323-4144
1-800-935-0508
FAX# (206) 323-7135
E-MAIL: info@brhinc.com

NO.	REVISION	BY	DATE	APPR

SURVEYED: BRH
DESIGNED: DWC
DRAWN: DWC
CHECKED: DWC, RJS
APPROVED: RJS

SCALE: As Noted
ONE INCH AT FULL SCALE IF NOT ONE INCH SCALE ACCORDINGLY

VERTICAL: NAVD 1988
HORIZONTAL: NAD 1983/1991
DATUM

CITY OF RENTON
Planning/Building/Public Works Dept.

NE 5TH PL / EDMONDS AVE NE
STORM SYSTEM REPLACEMENT PROJECT
CAMAS AVE NE STA 23+80 to STA 27+50

DATE: 9-4-13
FIELDBOOK:
PAGE:
DRAWING NO: 2013009.00
SHEET: 6 OF: x

D-2306

FILENAME: U:\LDD\2013\2009\DWG\VS-SUR.dwg

DRAWING NUMBER

SWP-27-2306
STORM SYSTEM IMPROVEMENT PROJECT
NE 5th Pl/Edmonds Ave NE
Page 06

SAFECO PRODUCTS • NEW HOPE, MINNESOTA
RECORDED BY PART #
REVISION DATE OF PRINT

DRAWING NUMBER

PROJECT NAME

SWP-27-2306

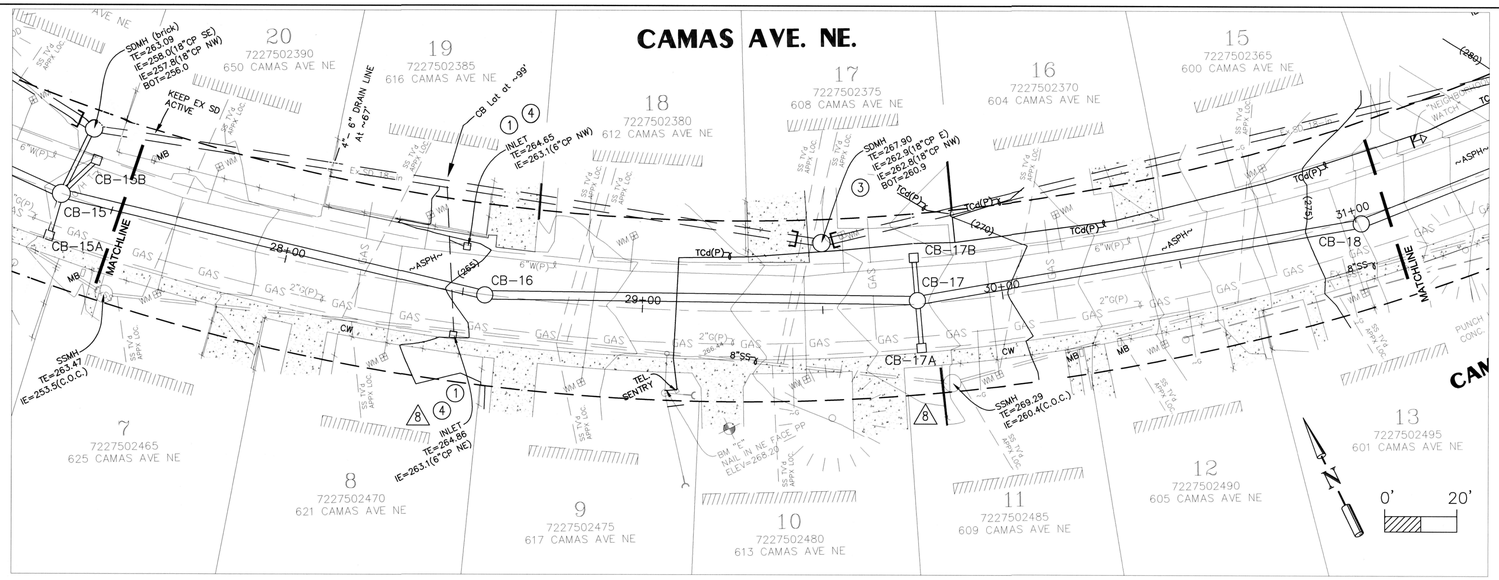

PROFILE ALONG STREET CENTERLINE SCALE: Horz. 1" = 20' Vert. 1" = 5'

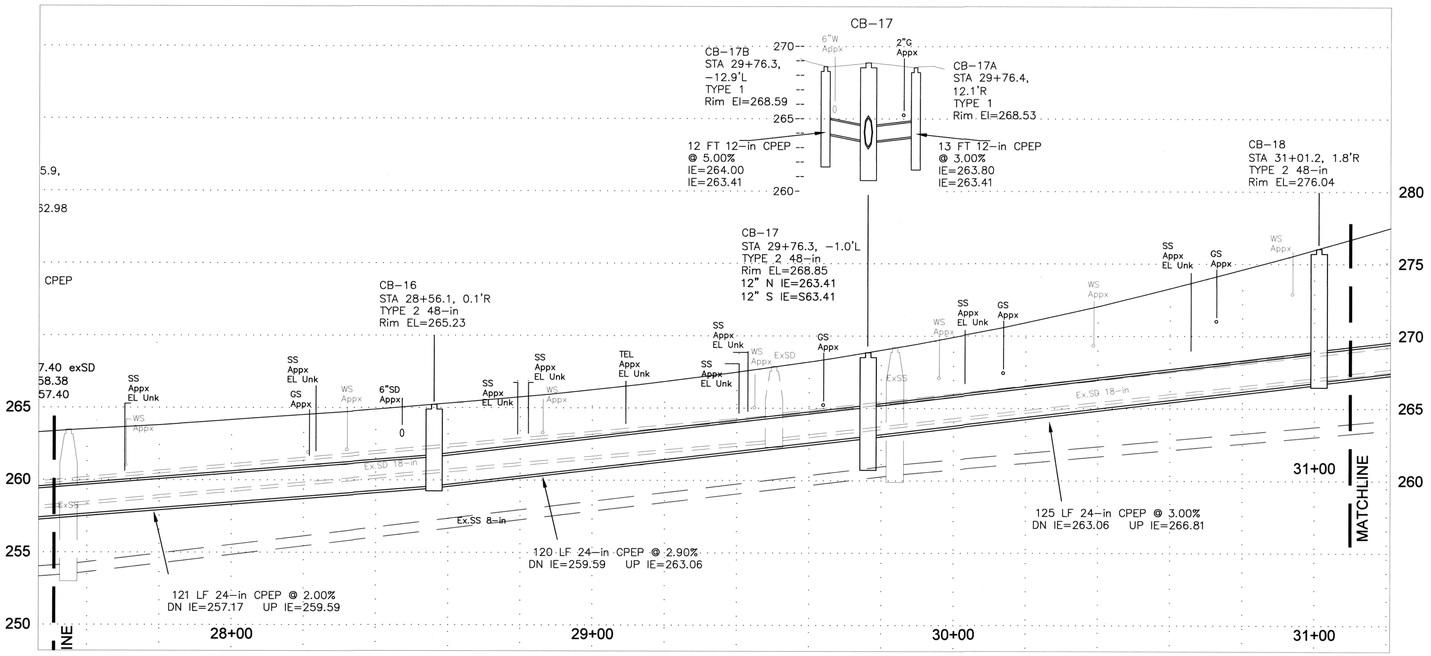

CALL 48 HOURS BEFORE YOU DIG
811

EXISTING UTILITY LOCATIONS ARE APPROXIMATE, NOT ALL UTILTIES MAY BE SHOWN. CONTRACTOR IS RESPONSIBLE FOR LOCATING ALL UTILITIES.

GENERAL NOTES

1. OVERHEAD UTILITY LINES NOT SHOWN.
2. DO NOT BLOCK DRIVEWAYS EXCEPT WHEN INSTALLING NEW STORM SYSTEM IN FRONT OF THEM.
3. PROTECT/SAVE ANY TREES, PLANTS, LANDSCAPING, MAILBOXES, FENCES AND OTHER IMPROVEMENTS IN CONSTR AREA. RESTORE/REPLACE AFTER CONSTRUCTION.
4. SIDE SEWER LOCATIONS ARE APPROX AND MAY VARY FROM LOCATION SHOWN.
5. SIDE SEWERS IN CONFLICT WITH NEW STORM LINE SHALL BE REBUILT PER SIDE SEWER RELOCATION DETAIL.
6. PIPE LENGTHS, SLOPES ARE MEASURED FROM CENTER OF STRUCTURES.
7. ALL CB RIMS AND GRATES SHALL MATCH EXISTING GRADE UNLESS NOTED OTHERWISE.
8. TYPE 2 CB"s SHALL BE RING AND COVER UNLESS NOTED OTHERWISE.
   TYPE 2 CB AS SHOWN ON PROFILE: 2-FT SUMP, OR NO SUMP.
   TYPE 2 CB MAINLINE IE's GIVEN ON PIPE CALLOUTS.
9. TYPE 1 CB's SHALL BE FRAME AND VANED GRATE UNLESS NOTED OTHERWISE.
   TYPE 1 CB AS SHOWN ON PROFILE: 2-FT SUMP, OR CONCRETE INLET.
   ADJUST CB LOCATION & RIM EL AS NEEDED TO DRAIN, CONFIRM w/INSPECTOR.
10. KEEP ALL EX CB INLETS ACTIVE UNTIL REPLACED BY NEW TYPE 1 CB'S.
11. CONTRACTOR SHALL PROVIDE TEMP STORMWATER BYPASS/PUMPING AS NEEDED.

[= PLUG EX PIPE

CONSTRUCTION NOTES

1. TEMP EROSION CONTROL: INSTALL CATCH BASIN FILTER FABRIC PER STD PLAN 216.30 AT ALL EX CB'S AND AT NEW CB's WHERE EARTHWORK OCCURS. INSTALL SILT FENCING WHERE NEEDED OR DIRECTED BY CITY.
2. 2. CONNECT NEW STORM SYSTEM TO EX STORM SYSTEM.
3. 3. ABANDON EX SD CATCH BASIN TYPE 2 AFTER FLOW IS TRANSFERRED TO NEW STORM SYSTEM.
4. 4. ABANDON EX SD CATCH BASIN TYPE 1.
5. 5. REPLACE STREET MONUMENT, IF DAMAGED.
6. 6. CORE DRILL EX SDMH FOR NEW STORM CONNECTION.
7. 7. ABANDON BORING/MONITORING WELL, B-1 THRU B-6.
8. 8. POTHOLE UTILITIY AND SURVEY LOCATION AND ELEVATION. DETERMINE CLEARANCE FROM NEW SD.
9. 9. PROJECT SIGN.
20. 20. SEWER TEE REPLACEMENT, SEE DETAIL AND SEWER SCHEDULE. CONTRACTOR TO VERIFY LOCATION OF TEES PRIOR TO EXCAVATION.

RESTORATION NOTES

1. PROTECT/SAVE ANY PLANTS, LANDSCAPING, MAILBOXES, FENCES AND OTHER IMPROVEMENTS IN CONSTR AREA. RESTORE/REPLACE AFTER CONSTRUCTION.
2. ALL DISTURBED GRASS AREA SHALL BE RESTORED WITH SOD.
3. ALL DISTURBED GRAVEL AREAS SHALL BE RESTORED WITH CRUSHED SURFACE BASE COURSE (WSDOT 9-03.9(3)).
4. TRENCH PATCH SHALL BE PER DETAIL TYPICAL PATCH FOR FLEXIBLE PAVEMENT (PER STD PLAN 110).
5. CITY MAY REQUIRE DAMAGED ASPHALT OUTSIDE OF TRENCH PATCH AREA TO BE REMOVED AND REPLACED, AS NEEDED.
6. ALL CURB, GUTTER, SIDEWALK, AND DRIVEWAY RESTORATION SHALL MATCH EXISTING TYPE AND DIMENSIONS, UNLESS NOTED OTHERWISE. SAWCUT EXTENT AS DIRECTED BY CITY.
7. RESTORE CONC CURB, GUTTER, SIDEWALK.
8. RESTORE CONC SIDEWALK (ASPHALT CURB OR NO CURB).
9. RESTORE CONC DRIVEWAY (ASPHALT CURB OR NO CURB).

SHEET NOTES

1. 1. –

D-230607

RECOMMENDED FOR APPROVAL
BY DANIEL CAREY 9/4/13
BY _____

RONALD J. STEVENS — STATE OF WASHINGTON — 35917 — REGISTERED PROFESSIONAL ENGINEER
9/6/13

BUSH, ROED & HITCHINGS, INC.
CIVIL ENGINEERS & LAND SURVEYORS
2009 MINOR AVE. EAST
SEATTLE, Washington
98102-3513
(206) 323-4144
1-800-935-0508
FAX# (206) 323-7135
E-MAIL: info@bhinc.com

NO.	REVISION	BY	DATE	APPR

SURVEYED: BRH
DESIGNED: DWC
DRAWN: DWC
CHECKED: DWC, RJS
APPROVED: RJS

SCALE: As Noted
ONE INCH AT FULL SCALE IF NOT ONE INCH, SCALE ACCORDINGLY

VERTICAL: NAVD 1988
HORIZONTAL: NAD 1983/1991
DATUM

CITY OF RENTON
Planning/Building/Public Works Dept.

NE 5TH PL / EDMONDS AVE NE
STORM SYSTEM REPLACEMENT PROJECT
CAMAS AVE NE STA 27+50 to STA 31+10

DATE: 9-4-13
FIELDBOOK:
PAGE:
DRAWING NO: 2013009.00
SHEET: 7 OF: x

D-2306

FILENAME: \\A\LDD\2013009\DWG\VS-SUR.dwg

SWP-27-2306
STORM SYSTEM IMPROVEMENT PROJECT
NE 5th Pl/Edmonds Ave NE
Page 07
DRAWING NUMBER

SWP-27-2306

PROJECT NAME

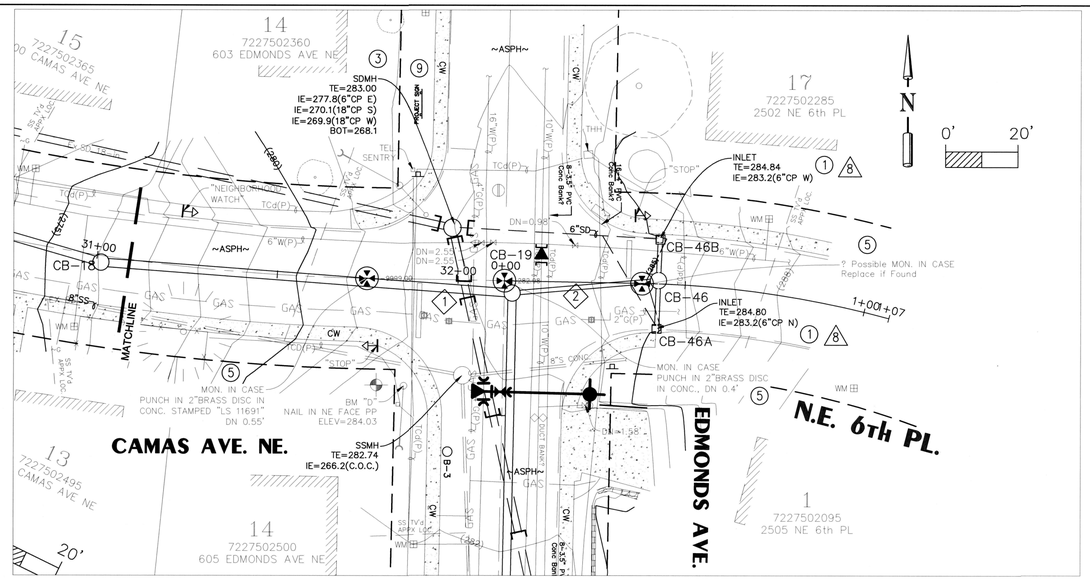

PROFILE ALONG STREET CENTERLINE SCALE: Horz. 1" = 20' Vert. 1" = 5'

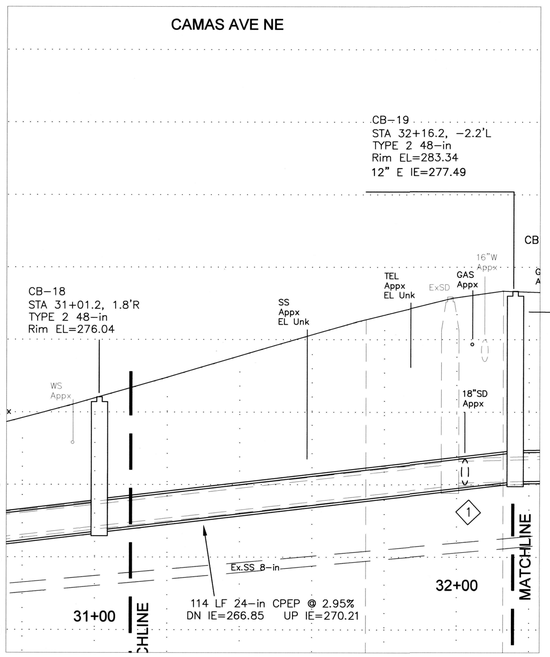

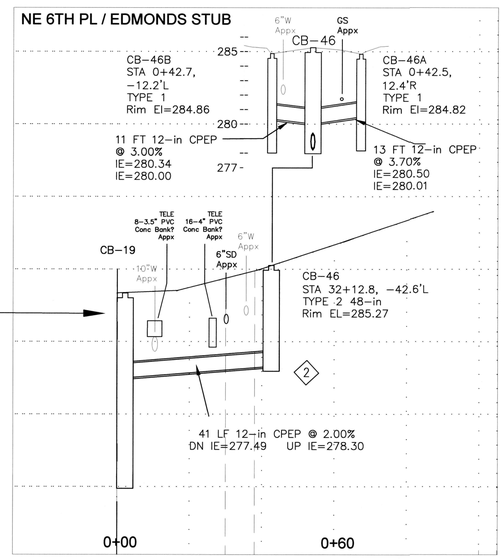

CALL 48 HOURS BEFORE YOU DIG
811

EXISTING UTILITY LOCATIONS ARE APPROXIMATE, NOT ALL UTILTIES MAY BE SHOWN. CONTRACTOR IS RESPONSIBLE FOR LOCATING ALL UTILITIES.

GENERAL NOTES

1. OVERHEAD UTILITY LINES NOT SHOWN.
2. DO NOT BLOCK DRIVEWAYS EXCEPT WHEN INSTALLING NEW STORM SYSTEM IN FRONT OF THEM.
3. PROTECT/SAVE ANY TREES, PLANTS, LANDSCAPING, MAILBOXES, FENCES AND OTHER IMPROVEMENTS IN CONSTR AREA. RESTORE/REPLACE AFTER CONSTRUCTION.
4. SIDE SEWER LOCATIONS ARE APPROX AND MAY VARY FROM LOCATION SHOWN.
5. SIDE SEWERS IN CONFLICT WITH NEW STORM LINE SHALL BE REBUILT PER SIDE SEWER RELOCATION DETAIL.
6. PIPE LENGTHS, SLOPES ARE MEASURED FROM CENTER OF STRUCTURES.
7. ALL CB RIMS AND GRATES SHALL MATCH EXISTING GRADE UNLESS NOTED OTHERWISE.
8. TYPE 2 CB"s SHALL BE RING AND COVER UNLESS NOTED OTHERWISE.
   TYPE 2 CB AS SHOWN ON PROFILE: 2-FT SUMP, OR NO SUMP.
   TYPE 2 CB MAINLINE IE's GIVEN ON PIPE CALLOUTS.
9. TYPE 1 CB's SHALL BE FRAME AND VANED GRATE UNLESS NOTED OTHERWISE.
   TYPE 1 CB AS SHOWN ON PROFILE: 2-FT SUMP, OR CONCRETE INLET.
   ADJUST CB LOCATION & RIM EL AS NEEDED TO DRAIN, CONFIRM w/INSPECTOR.
10. KEEP ALL EX CB INLETS ACTIVE UNTIL REPLACED BY NEW TYPE 1 CB'S.
11. CONTRACTOR SHALL PROVIDE TEMP STORMWATER BYPASS/PUMPING AS NEEDED.

[= PLUG EX PIPE

CONSTRUCTION NOTES

(1) 1. TEMP EROSION CONTROL: INSTALL CATCH BASIN FILTER FABRIC PER STD PLAN 216.30 AT ALL EX CB'S AND AT NEW CB's WHERE EARTHWORK OCCURS. INSTALL SILT FENCING WHERE NEEDED OR DIRECTED BY CITY.
(2) 2. CONNECT NEW STORM SYSTEM TO EX STORM SYSTEM.
(3) 3. ABANDON EX SD CATCH BASIN TYPE 2 AFTER FLOW IS TRANSFERRED TO NEW STORM SYSTEM.
(4) 4. ABANDON EX SD CATCH BASIN TYPE 1.
(5) 5. REPLACE STREET MONUMENT, IF DAMAGED.
(6) 6. CORE DRILL EX SDMH FOR NEW STORM CONNECTION.
(7) 7. ABANDON BORING/MONITORING WELL, B-1 THRU B-6.
(8) 8. POTHOLE UTILTIY AND SURVEY LOCATION AND ELEVATION. DETERMINE CLEARANCE FROM NEW SD.
(9) 9. PROJECT SIGN.
(20) 20. SEWER TEE REPLACEMENT, SEE DETAIL AND SEWER SCHEDULE. CONTRACTOR TO VERIFY LOCATION OF TEES PRIOR TO EXCAVATION.

RESTORATION NOTES

1. PROTECT/SAVE ANY PLANTS, LANDSCAPING, MAILBOXES, FENCES AND OTHER IMPROVEMENTS IN CONSTR AREA. RESTORE/REPLACE AFTER CONSTRUCTION.
(2) 2. ALL DISTURBED GRASS AREA SHALL BE RESTORED WITH SOD.
(3) 3. ALL DISTURBED GRAVEL AREAS SHALL BE RESTORED WITH CRUSHED SURFACE BASE COURSE (WSDOT 9-03.9(3)).
4. TRENCH PATCH SHALL BE PER DETAIL TYPICAL PATCH FOR FLEXIBLE PAVEMENT (PER STD PLAN 110).
5. CITY MAY REQUIRE DAMAGED ASPHALT OUTSIDE OF TRENCH PATCH AREA TO BE REMOVED AND REPLACED, AS NEEDED.
6. ALL CURB, GUTTER, SIDEWALK, AND DRIVEWAY RESTORATION SHALL MATCH EXISTING TYPE AND DIMENSIONS, UNLESS NOTED OTHERWISE. SAWCUT EXTENT AS DIRECTED BY CITY.
(7) 7. RESTORE CONC CURB, GUTTER, SIDEWALK.
(8) 8. RESTORE CONC SIDEWALK (ASPHALT CURB OR NO CURB).
(9) 9. RESTORE CONC DRIVEWAY (ASPHALT CURB OR NO CURB).

SHEET NOTES

<1> 1. PROVIDE TEMP WATER TIGHT CONNECTION OR BYPASS PUMPING BEFORE CUTTING AND CAPPING EX 18"SD.
<2> 2. INSTALL CB-46, 46A, 46B AFTER NEW 24"SD IS ACTIVE.

D-230608

RECOMMENDED FOR APPROVAL
BY DANIEL CAREY 9/4/13
BY _____

RONALD J. STRAKA — STATE OF WASHINGTON — 24791 — REGISTERED PROFESSIONAL ENGINEER
9/6/13

BUSH, ROED & HITCHINGS, INC.
CIVIL ENGINEERS & LAND SURVEYORS
2009 MINOR AVE. EAST
SEATTLE, Washington
98102-3513
(206) 323-4144
1-800-935-0508
FAX# (206) 323-7135
E-MAIL: info@bhinc.com

NO.	REVISION	BY	DATE	APPR

SURVEYED: BRH
DESIGNED: DWC
DRAWN: DWC
CHECKED: DWC, RJS
APPROVED: RJS

SCALE: As Noted
ONE INCH AT FULL SCALE IF NOT ONE INCH SCALE ACCORDINGLY

VERTICAL: NAVD 1988
HORIZONTAL: NAD 1983/1991
DATUM

CITY OF RENTON
Planning/Building/Public Works Dept.

NE 5TH PL / EDMONDS AVE NE
STORM SYSTEM REPLACEMENT PROJECT
CAMAS AVE NE STA 31+10 to STA 32+12
NE 6th / EDMONDS STUB

DATE: 9-4-13
FIELDBOOK:
PAGE:
DRAWING NO: 2013009.00
SHEET: 8 OF: x

D-2306

FILENAME: S:\CAD\2013\2013009.00\T\1

DRAWING NUMBER
SAFCO PRODUCTS • NEW HOPE, MINNESOTA
RECEIVER BY PART NUMBER 15002

SWP-27-2306
STORM SYSTEM IMPROVEMENT PROJECT
NE 5th Pl/Edmonds Ave NE
Page 08

SWP-27-2306

PROJECT NAME

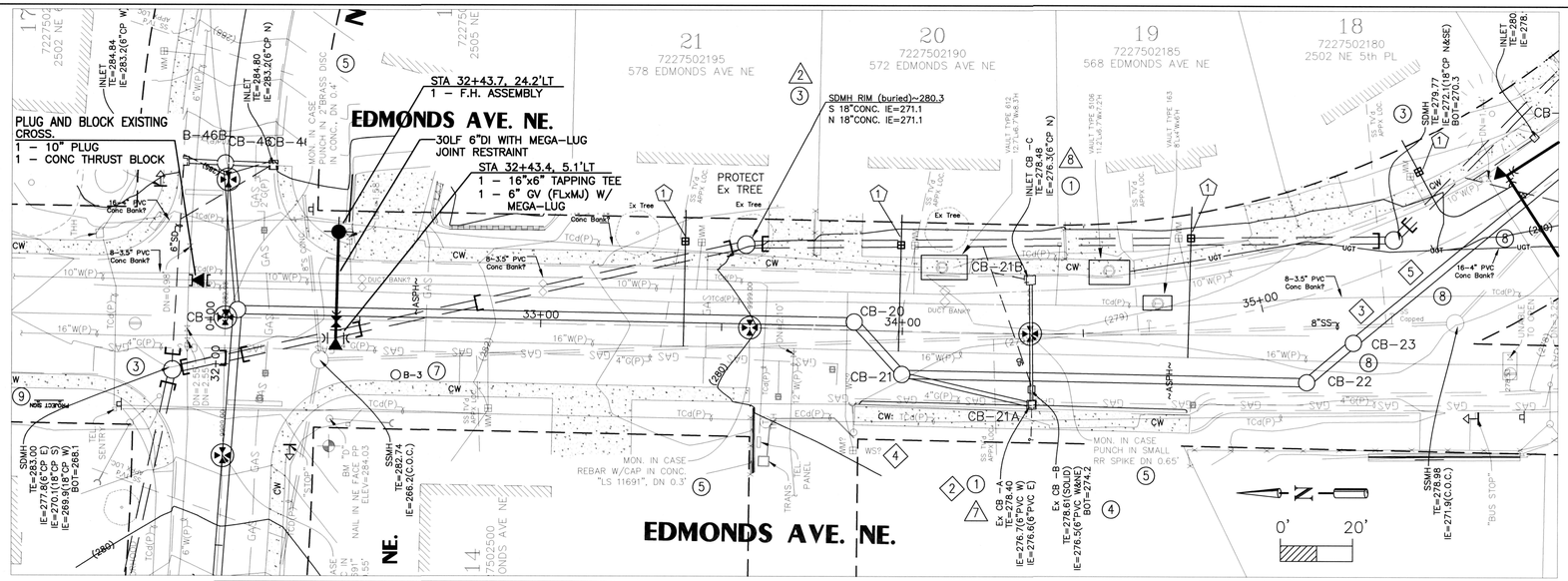

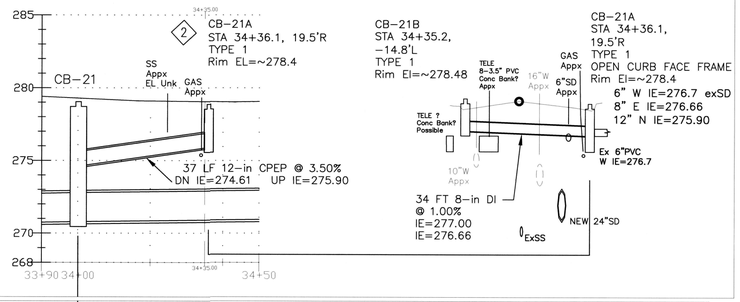

PROFILE ALONG STREET CENTERLINE SCALE: Horz. 1" = 20' Vert. 1" = 5'

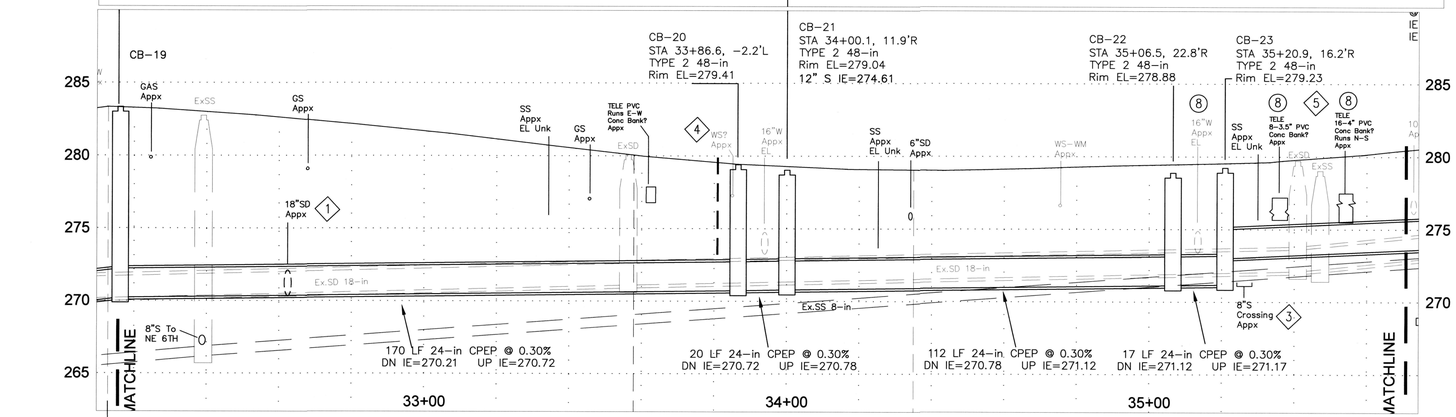

SECTION WEST ON CAMAS AVE

RECOMMENDED FOR APPROVAL
BY DANIEL CAREY 9/4/13
BY _____

D-230609

CALL 48 HOURS BEFORE YOU DIG 811

EXISTING UTILITY LOCATIONS ARE APPROXIMATE, NOT ALL UTILTIES MAY BE SHOWN. CONTRACTOR IS RESPONSIBLE FOR LOCATING ALL UTILITIES.

GENERAL NOTES

1. OVERHEAD UTILITY LINES NOT SHOWN.
2. DO NOT BLOCK DRIVEWAYS EXCEPT WHEN INSTALLING NEW STORM SYSTEM IN FRONT OF THEM.
3. PROTECT/SAVE ANY TREES, PLANTS, LANDSCAPING, MAILBOXES, FENCES AND OTHER IMPROVEMENTS IN CONSTR AREA. RESTORE/REPLACE AFTER CONSTRUCTION.
4. SIDE SEWER LOCATIONS ARE APPROX AND MAY VARY FROM LOCATION SHOWN.
5. SIDE SEWERS IN CONFLICT WITH NEW STORM LINE SHALL BE REBUILT PER SIDE SEWER RELOCATION DETAIL.
6. PIPE LENGTHS, SLOPES ARE MEASURED FROM CENTER OF STRUCTURES.
7. ALL CB RIMS AND GRATES SHALL MATCH EXISTING GRADE UNLESS NOTED OTHERWISE.
8. TYPE 2 CB"s SHALL BE RING AND COVER UNLESS NOTED OTHERWISE. TYPE 2 CB AS SHOWN ON PROFILE: 2–FT SUMP, OR NO SUMP. TYPE 2 CB MAINLINE IE's GIVEN ON PIPE CALLOUTS.
9. TYPE 1 CB's SHALL BE FRAME AND VANED GRATE UNLESS NOTED OTHERWISE. TYPE 1 CB AS SHOWN ON PROFILE: 2–FT SUMP, OR CONCRETE INLET. ADJUST CB LOCATION & RIM EL AS NEEDED TO DRAIN, CONFIRM w/INSPECTOR.
10. KEEP ALL EX CB INLETS ACTIVE UNTIL REPLACED BY NEW TYPE 1 CB'S.
11. CONTRACTOR SHALL PROVIDE TEMP STORMWATER BYPASS/PUMPING AS NEEDED.

[= PLUG EX PIPE

CONSTRUCTION NOTES

(1) 1. TEMP EROSION CONTROL: INSTALL CATCH BASIN FILTER FABRIC PER STD PLAN 216.30 AT ALL EX CB'S AND AT NEW CB's WHERE EARTHWORK OCCURS. INSTALL SILT FENCING WHERE NEEDED OR DIRECTED BY CITY.
(2) 2. CONNECT NEW STORM SYSTEM TO EX STORM SYSTEM.
(3) 3. ABANDON EX SD CATCH BASIN TYPE 2 AFTER FLOW IS TRANSFERRED TO NEW STORM SYSTEM.
(4) 4. ABANDON EX SD CATCH BASIN TYPE 1.
(5) 5. REPLACE STREET MONUMENT, IF DAMAGED.
(6) 6. CORE DRILL EX SDMH FOR NEW STORM CONNECTION.
(7) 7. ABANDON BORING/MONITORING WELL, B–1 THRU B–6.
(8) 8. POTHOLE UTILTIY AND SURVEY LOCATION AND ELEVATION. DETERMINE CLEARANCE FROM NEW SD.
(9) 9. PROJECT SIGN.
(20) 20. SEWER TEE REPLACEMENT, SEE DETAIL AND SEWER SCHEDULE. CONTRACTOR TO VERIFY LOCATION OF TEES PRIOR TO EXCAVATION.

RESTORATION NOTES

1. PROTECT/SAVE ANY PLANTS, LANDSCAPING, MAILBOXES, FENCES AND OTHER IMPROVEMENTS IN CONSTR AREA. RESTORE/REPLACE AFTER CONSTRUCTION.
(2) 2. ALL DISTURBED GRASS AREA SHALL BE RESTORED WITH SOD.
(3) 3. ALL DISTURBED GRAVEL AREAS SHALL BE RESTORED WITH CRUSHED SURFACE BASE COURSE (WSDOT 9–03.9(3)).
4. TRENCH PATCH SHALL BE PER DETAIL TYPICAL PATCH FOR FLEXIBLE PAVEMENT (PER STD PLAN 110).
5. CITY MAY REQUIRE DAMAGED ASPHALT OUTSIDE OF TRENCH PATCH AREA TO BE REMOVED AND REPLACED, AS NEEDED.
6. ALL CURB, GUTTER, SIDEWALK, AND DRIVEWAY RESTORATION SHALL MATCH EXISTING TYPE AND DIMENSIONS, UNLESS NOTED OTHERWISE. SAWCUT EXTENT AS DIRECTED BY CITY.
(7) 7. RESTORE CONC CURB, GUTTER, SIDEWALK.
(8) 8. RESTORE CONC SIDEWALK (ASPHALT CURB OR NO CURB).
(9) 9. RESTORE CONC DRIVEWAY (ASPHALT CURB OR NO CURB).

SHEET NOTES

(1) 1. PROVIDE TEMP WATER TIGHT CONNECTION OR BYPASS PUMPING BEFORE CUTTING AND CAPPING EX 18"SD.
(2) 2. INSTALL CB–21A,B AFTER NEW 24"SD IS ACTIVE.
(3) 3. REBUILD SEWER MAIN AT CROSSING, SEE DETAIL.
(4) 4. WATER SERVICE, CONFIRM LOCATION. COORD WITH CITY WATER MAINTENANCE TO RELOCATE IF NEEDED.
(5) 5. CENTURYLINK TELECOM CONDUITS, CONC ENCASED DUCT BANK. COORD W/ PRIVATE UTILTIY IF WORK NEEDED.
(1) 6. REPLACE EXISTING ¾" WATER SERVICE WITH NEW 1" WATER SERVICE PER STANDARD DETAIL 320.1. (TYPICAL FOR ALL SERVICES) CONNECT NEW METER SETTER AND NEW COPPER TAIL PIECE TO CUSTOMER PRIVATE SERVICE LINE.

BUSH, ROED & HITCHINGS, INC.
CIVIL ENGINEERS & LAND SURVEYORS
2009 MINOR AVE. EAST (206) 323–4144
SEATTLE, Washington 1–800–935–0508
98102–3513 FAX# (206) 323–7135
E–MAIL: info@bhinc.com

RONALD J. STRACKE STATE OF WASHINGTON 20747 REGISTERED PROFESSIONAL ENGINEER 9/6/13

NO.	REVISION	BY	DATE	APPR

SURVEYED: BRH
DESIGNED: DWC
DRAWN: DWC
CHECKED: DWC, RJS
APPROVED: RJS

SCALE: As Noted
ONE INCH AT FULL SCALE IF NOT ONE INCH SCALE ACCORDINGLY

VERTICAL: NAVD 1988
HORIZONTAL: NAD 1983/1991
DATUM

CITY OF RENTON
Planning/Building/Public Works Dept.

NE 5TH PL / EDMONDS AVE NE
STORM SYSTEM REPLACEMENT PROJECT
EDMONDS AVE NE STA 32+12 to STA 35+70

DATE: 9–4–13
FIELDBOOK:
PAGE:
DRAWING NO: 2013009.00
SHEET: 9 OF: x

D–2306

FILENAME: U:\LDP\2013009\DWG\SS–SUR.dwg

DRAWING NUMBER
SWP-27-2306
STORM SYSTEM IMPROVEMENT PROJECT
NE 5th PL/Edmonds Ave NE
Page 09

SAFCO PRODUCTS • NEW HOPE, MINNESOTA
3Y PRINT NUMBER 55050

DRAWING NUMBER
SAFCO PRODUCTS • NEW HOPE, MINNESOTA
3Y PRINT NUMBER 55050

DRAWI
SAFCO PRODUCTS
NEW HOPE MN

SWP-27-2306

PROJECT NAME

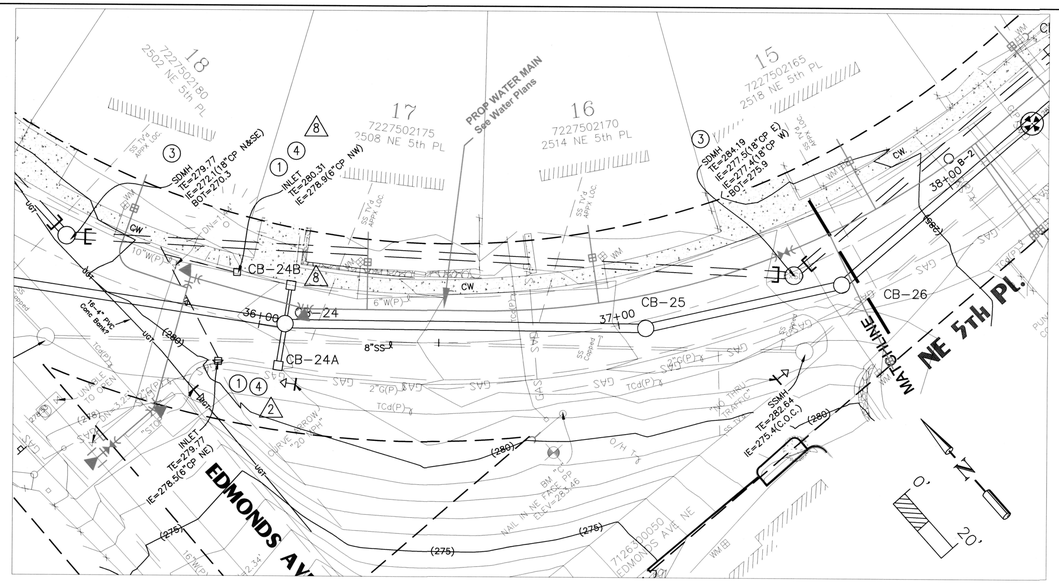

PROFILE ALONG STREET CENTERLINE SCALE: Horz. 1" = 20' Vert. 1" = 5'

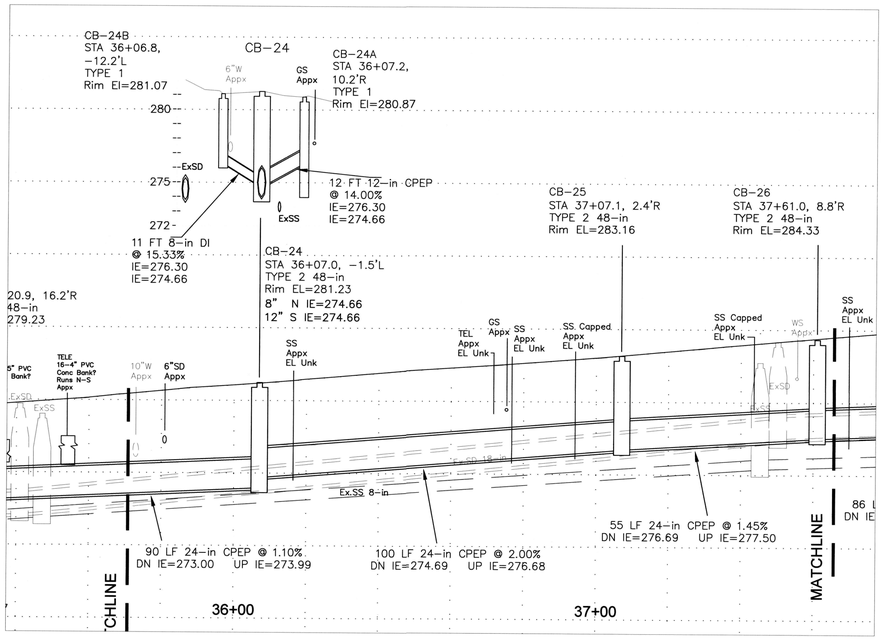

CALL 48 HOURS BEFORE YOU DIG
811

EXISTING UTILITY LOCATIONS ARE APPROXIMATE,
NOT ALL UTILTIES MAY BE SHOWN.
CONTRACTOR IS RESPONSIBLE FOR LOCATING ALL UTILITIES.

GENERAL NOTES

1. OVERHEAD UTILITY LINES NOT SHOWN.
2. DO NOT BLOCK DRIVEWAYS EXCEPT WHEN INSTALLING NEW STORM SYSTEM IN FRONT OF THEM.
3. PROTECT/SAVE ANY TREES, PLANTS, LANDSCAPING, MAILBOXES, FENCES AND OTHER IMPROVEMENTS IN CONSTR AREA. RESTORE/REPLACE AFTER CONSTRUCTION.
4. SIDE SEWER LOCATIONS ARE APPROX AND MAY VARY FROM LOCATION SHOWN.
5. SIDE SEWERS IN CONFLICT WITH NEW STORM LINE SHALL BE REBUILT PER SIDE SEWER RELOCATION DETAIL.
6. PIPE LENGTHS, SLOPES ARE MEASURED FROM CENTER OF STRUCTURES.
7. ALL CB RIMS AND GRATES SHALL MATCH EXISTING GRADE UNLESS NOTED OTHERWISE.
8. TYPE 2 CB"s SHALL BE RING AND COVER UNLESS NOTED OTHERWISE.
   TYPE 2 CB AS SHOWN ON PROFILE: 2-FT SUMP, OR NO SUMP.
   TYPE 2 CB MAINLINE IE's GIVEN ON PIPE CALLOUTS.
9. TYPE 1 CB's SHALL BE FRAME AND VANED GRATE UNLESS NOTED OTHERWISE.
   TYPE 1 CB AS SHOWN ON PROFILE: 2-FT SUMP, OR CONCRETE INLET.
   ADJUST CB LOCATION & RIM EL AS NEEDED TO DRAIN, CONFIRM w/INSPECTOR.
10. KEEP ALL EX CB INLETS ACTIVE UNTIL REPLACED BY NEW TYPE 1 CB'S.
11. CONTRACTOR SHALL PROVIDE TEMP STORMWATER BYPASS/PUMPING AS NEEDED.

[= PLUG EX PIPE

CONSTRUCTION NOTES

(1) 1. TEMP EROSION CONTROL: INSTALL CATCH BASIN FILTER FABRIC PER STD PLAN 216.30 AT ALL EX CB'S AND AT NEW CB's WHERE EARTHWORK OCCURS. INSTALL SILT FENCING WHERE NEEDED OR DIRECTED BY CITY.
(2) 2. CONNECT NEW STORM SYSTEM TO EX STORM SYSTEM.
(3) 3. ABANDON EX SD CATCH BASIN TYPE 2 AFTER FLOW IS TRANSFERRED TO NEW STORM SYSTEM.
(4) 4. ABANDON EX SD CATCH BASIN TYPE 1.
(5) 5. REPLACE STREET MONUMENT, IF DAMAGED.
(6) 6. CORE DRILL EX SDMH FOR NEW STORM CONNECTION.
(7) 7. ABANDON BORING/MONITORING WELL, B-1 THRU B-6.
(8) 8. POTHOLE UTILTIY AND SURVEY LOCATION AND ELEVATION. DETERMINE CLEARANCE FROM NEW SD.
(9) 9. PROJECT SIGN.

(20) 20. SEWER TEE REPLACEMENT, SEE DETAIL AND SEWER SCHEDULE. CONTRACTOR TO VERIFY LOCATION OF TEES PRIOR TO EXCAVATION.

RESTORATION NOTES

1. PROTECT/SAVE ANY PLANTS, LANDSCAPING, MAILBOXES, FENCES AND OTHER IMPROVEMENTS IN CONSTR AREA. RESTORE/REPLACE AFTER CONSTRUCTION.
(2) 2. ALL DISTURBED GRASS AREA SHALL BE RESTORED WITH SOD.
(3) 3. ALL DISTURBED GRAVEL AREAS SHALL BE RESTORED WITH CRUSHED SURFACE BASE COURSE (WSDOT 9-03.9(3)).
4. TRENCH PATCH SHALL BE PER DETAIL TYPICAL PATCH FOR FLEXIBLE PAVEMENT (PER STD PLAN 110).
5. CITY MAY REQUIRE DAMAGED ASPHALT OUTSIDE OF TRENCH PATCH AREA TO BE REMOVED AND REPLACED, AS NEEDED.
6. ALL CURB, GUTTER, SIDEWALK, AND DRIVEWAY RESTORATION SHALL MATCH EXISTING TYPE AND DIMENSIONS, UNLESS NOTED OTHERWISE. SAWCUT EXTENT AS DIRECTED BY CITY.
(7) 7. RESTORE CONC CURB, GUTTER, SIDEWALK.
(8) 8. RESTORE CONC SIDEWALK (ASPHALT CURB OR NO CURB).
(9) 9. RESTORE CONC DRIVEWAY (ASPHALT CURB OR NO CURB).

SHEET NOTES

(1) 1. WATER SERVICE, CONFIRM LOCATION. COORD WITH CITY WATER MAINTENANCE TO RELOCATE IF NEEDED.

D-230610

RECOMMENDED FOR APPROVAL
BY DANIEL CAREY 9/4/13
BY _____

RONALD J. STRAKA — STATE OF WASHINGTON — 20717 — REGISTERED PROFESSIONAL ENGINEER
9/6/13

BUSH, ROED & HITCHINGS, INC.
CIVIL ENGINEERS & LAND SURVEYORS
2009 MINOR AVE. EAST (206) 323-4144
SEATTLE, Washington 1-800-935-0508
98102-3513 FAX# (206) 323-7135
E-MAIL: info@brhinc.com

NO.	REVISION	BY	DATE	APPR

SURVEYED: BRH
DESIGNED: DWC
DRAWN: DWC
CHECKED: DWC, RJS
APPROVED: RJS

SCALE: As Noted
ONE INCH AT FULL SCALE IF NOT ONE INCH SCALE ACCORDINGLY

VERTICAL: NAVD 1988
HORIZONTAL: NAD 1983/1991
DATUM

CITY OF RENTON
Planning/Building/Public Works Dept.

NE 5TH PL / EDMONDS AVE NE
STORM SYSTEM REPLACEMENT PROJECT
EDMONDS AVE NE / NE 5th PL STA 35+70 to STA 37+65

DATE: 9-4-13
FIELDBOOK:
PAGE:
DRAWING NO: 2013009.00
SHEET: 10 OF x

D-2306

FILENAME: U:\LDD\2013009\DWG\VS-SUR.dwg

NEW HERE, MINNESOTA PART NUMBER 15032 — DRAWING NUMBER

GRECO-FREDERICTS • NEW HERE, MINNESOTA REORDER BY PART NUMBER 15032

SWP-27-2306
STORM SYSTEM IMPROVEMENT PROJECT
NE 5th Pl/Edmonds Ave NE
Page 10

DRAWING NUMBER

SWP-27-2306

PROJECT NAME

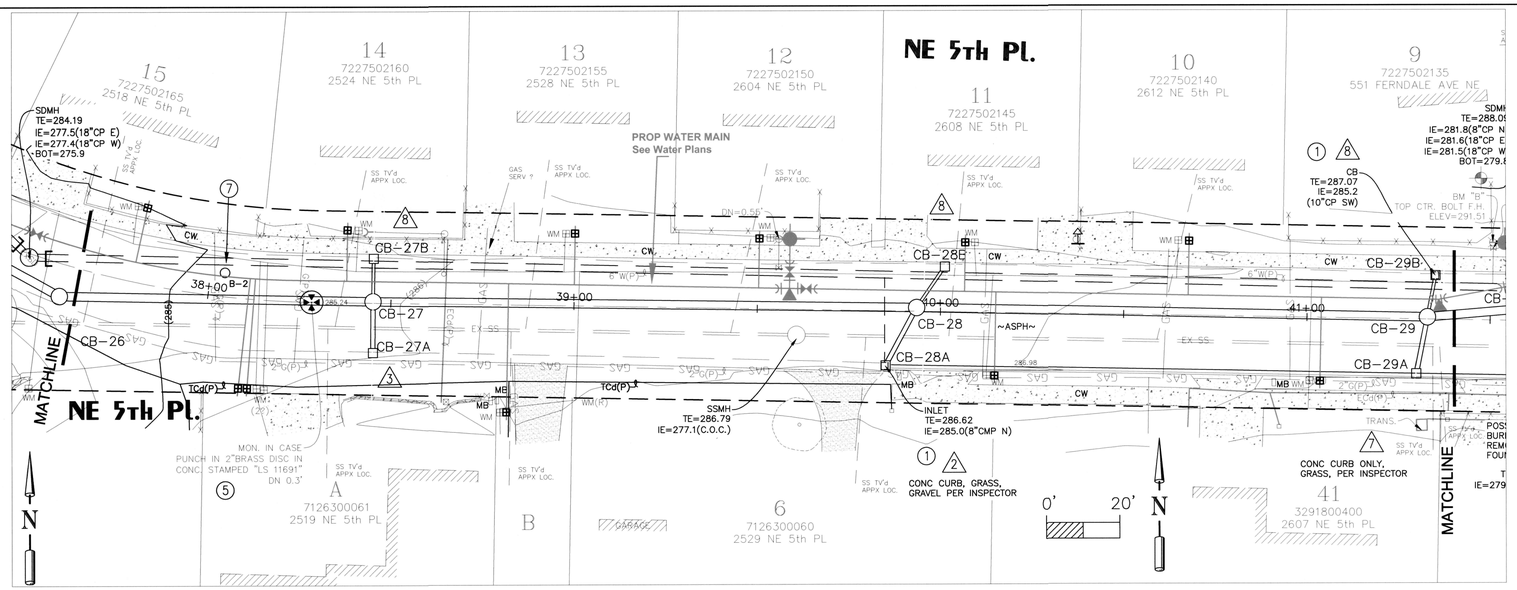

PROFILE ALONG STREET CENTERLINE SCALE: Horz. 1" = 20' Vert. 1" = 5'

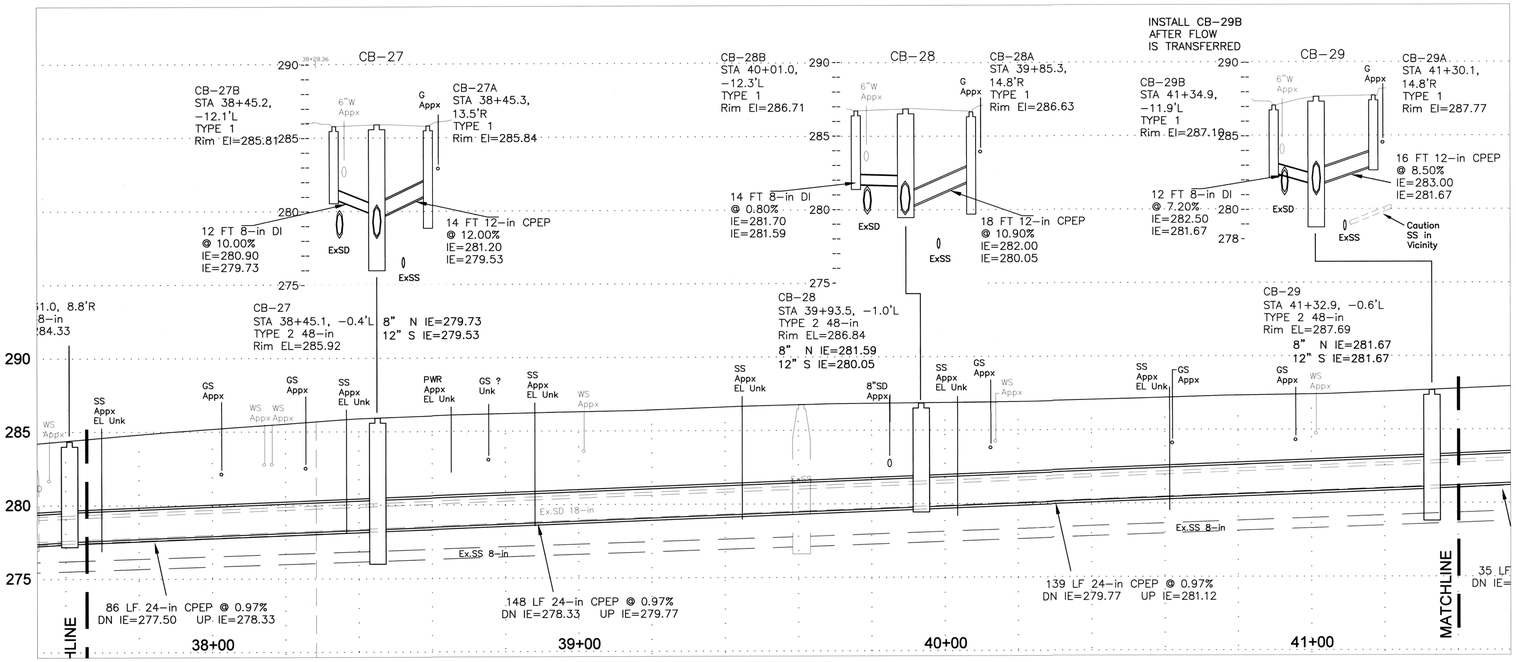

CALL 48 HOURS BEFORE YOU DIG
811

EXISTING UTILITY LOCATIONS ARE APPROXIMATE, NOT ALL UTILTIES MAY BE SHOWN. CONTRACTOR IS RESPONSIBLE FOR LOCATING ALL UTILITIES.

GENERAL NOTES

1. OVERHEAD UTILITY LINES NOT SHOWN.
2. DO NOT BLOCK DRIVEWAYS EXCEPT WHEN INSTALLING NEW STORM SYSTEM IN FRONT OF THEM.
3. PROTECT/SAVE ANY TREES, PLANTS, LANDSCAPING, MAILBOXES, FENCES AND OTHER IMPROVEMENTS IN CONSTR AREA. RESTORE/REPLACE AFTER CONSTRUCTION.
4. SIDE SEWER LOCATIONS ARE APPROX AND MAY VARY FROM LOCATION SHOWN.
5. SIDE SEWERS IN CONFLICT WITH NEW STORM LINE SHALL BE REBUILT PER SIDE SEWER RELOCATION DETAIL.
6. PIPE LENGTHS, SLOPES ARE MEASURED FROM CENTER OF STRUCTURES.
7. ALL CB RIMS AND GRATES SHALL MATCH EXISTING GRADE UNLESS NOTED OTHERWISE.
8. TYPE 2 CB"s SHALL BE RING AND COVER UNLESS NOTED OTHERWISE.
   TYPE 2 CB AS SHOWN ON PROFILE: 2-FT SUMP, OR NO SUMP.
   TYPE 2 CB MAINLINE IE's GIVEN ON PIPE CALLOUTS.
9. TYPE 1 CB's SHALL BE FRAME AND VANED GRATE UNLESS NOTED OTHERWISE.
   TYPE 1 CB AS SHOWN ON PROFILE: 2-FT SUMP, OR CONCRETE INLET.
   ADJUST CB LOCATION & RIM EL AS NEEDED TO DRAIN, CONFIRM w/INSPECTOR.
10. KEEP ALL EX CB INLETS ACTIVE UNTIL REPLACED BY NEW TYPE 1 CB'S.
11. CONTRACTOR SHALL PROVIDE TEMP STORMWATER BYPASS/PUMPING AS NEEDED.

[= PLUG EX PIPE

CONSTRUCTION NOTES

(1) 1. TEMP EROSION CONTROL: INSTALL CATCH BASIN FILTER FABRIC PER STD PLAN 216.30 AT ALL EX CB'S AND AT NEW CB's WHERE EARTHWORK OCCURS. INSTALL SILT FENCING WHERE NEEDED OR DIRECTED BY CITY.
(2) 2. CONNECT NEW STORM SYSTEM TO EX STORM SYSTEM.
(3) 3. ABANDON EX SD CATCH BASIN TYPE 2 AFTER FLOW IS TRANSFERRED TO NEW STORM SYSTEM.
(4) 4. ABANDON EX SD CATCH BASIN TYPE 1.
(5) 5. REPLACE STREET MONUMENT, IF DAMAGED.
(6) 6. CORE DRILL EX SDMH FOR NEW STORM CONNECTION.
(7) 7. ABANDON BORING/MONITORING WELL, B-1 THRU B-6.
(8) 8. POTHOLE UTILTIY AND SURVEY LOCATION AND ELEVATION. DETERMINE CLEARANCE FROM NEW SD.
(9) 9. PROJECT SIGN.
(20) 20. SEWER TEE REPLACEMENT, SEE DETAIL AND SEWER SCHEDULE. CONTRACTOR TO VERIFY LOCATION OF TEES PRIOR TO EXCAVATION.

RESTORATION NOTES

1. PROTECT/SAVE ANY PLANTS, LANDSCAPING, MAILBOXES, FENCES AND OTHER IMPROVEMENTS IN CONSTR AREA. RESTORE/REPLACE AFTER CONSTRUCTION.
(2) 2. ALL DISTURBED GRASS AREA SHALL BE RESTORED WITH SOD.
(3) 3. ALL DISTURBED GRAVEL AREAS SHALL BE RESTORED WITH CRUSHED SURFACE BASE COURSE (WSDOT 9-03.9(3)).
4. TRENCH PATCH SHALL BE PER DETAIL TYPICAL PATCH FOR FLEXIBLE PAVEMENT (PER STD PLAN 110).
5. CITY MAY REQUIRE DAMAGED ASPHALT OUTSIDE OF TRENCH PATCH AREA TO BE REMOVED AND REPLACED, AS NEEDED.
6. ALL CURB, GUTTER, SIDEWALK, AND DRIVEWAY RESTORATION SHALL MATCH EXISTING TYPE AND DIMENSIONS, UNLESS NOTED OTHERWISE. SAWCUT EXTENT AS DIRECTED BY CITY.
(7) 7. RESTORE CONC CURB, GUTTER, SIDEWALK.
(8) 8. RESTORE CONC SIDEWALK (ASPHALT CURB OR NO CURB).
(9) 9. RESTORE CONC DRIVEWAY (ASPHALT CURB OR NO CURB).

SHEET NOTES

(1) 1. WATER SERVICE, CONFIRM LOCATION. COORD WITH CITY WATER MAINTENANCE TO RELOCATE IF NEEDED.

D-230611

RECOMMENDED FOR APPROVAL
BY DANIEL CAREY 9/4/13
BY _____

RONALD J. STRAZA — STATE OF WASHINGTON — 29707 — REGISTERED PROFESSIONAL ENGINEER
9/6/13

BUSH, ROED & HITCHINGS, INC.
CIVIL ENGINEERS & LAND SURVEYORS
2009 MINOR AVE. EAST
SEATTLE, Washington
98102-3513
(206) 323-4144
1-800-935-0508
FAX# (206) 323-7135
E-MAIL: info@bhrinc.com

NO.	REVISION	BY	DATE	APPR

SURVEYED: BRH
DESIGNED: DWC
DRAWN: DWC
CHECKED: DWC, RJS
APPROVED: RJS
SCALE: As Noted
ONE INCH AT FULL SCALE IF NOT ONE INCH SCALE ACCORDINGLY
VERTICAL: NAVD 1988
HORIZONTAL: NAD 1983/1991
DATUM

CITY OF RENTON
Planning/Building/Public Works Dept.

NE 5TH PL / EDMONDS AVE NE
STORM SYSTEM REPLACEMENT PROJECT
NE 5th PL STA 37+65 to STA 41+40

DATE: 9-4-13
FIELDBOOK:
PAGE:
DRAWING NO: 2013009.00
SHEET: 11 OF: x

D-2306

FILENAME: U:\LDP\2013009\DWF\VSS-SUR.dwg

DRAWING NUMBER
SAFCO PRODUCTS • NEW HOPE, MINNESOTA
REORDER BY PART NUMBER 65052

SWP-27-2306
STORM SYSTEM IMPROVEMENT PROJECT
NE 5 PlEdmonds Ave NE
Page 11

SWP-27-2306

PROJECT NAME

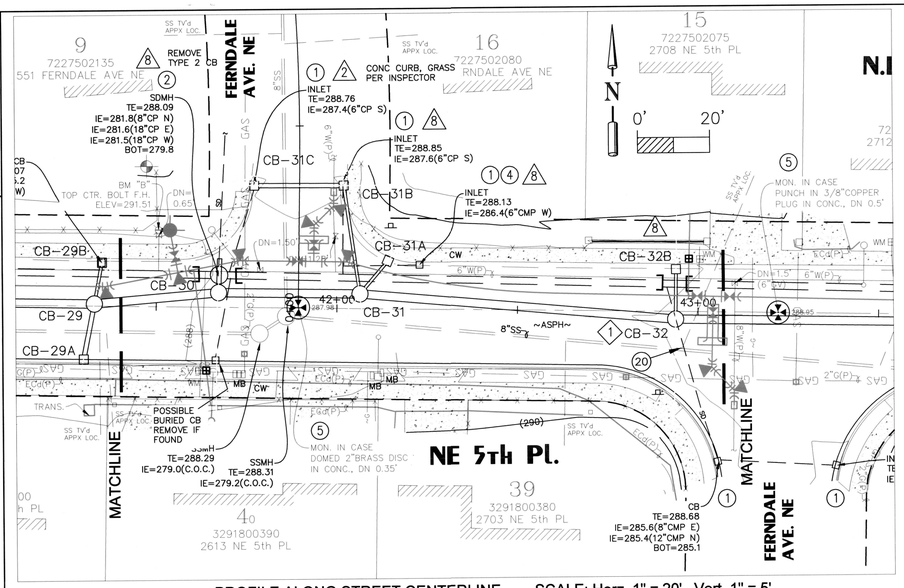

PROFILE ALONG STREET CENTERLINE SCALE: Horz. 1" = 20' Vert. 1" = 5'

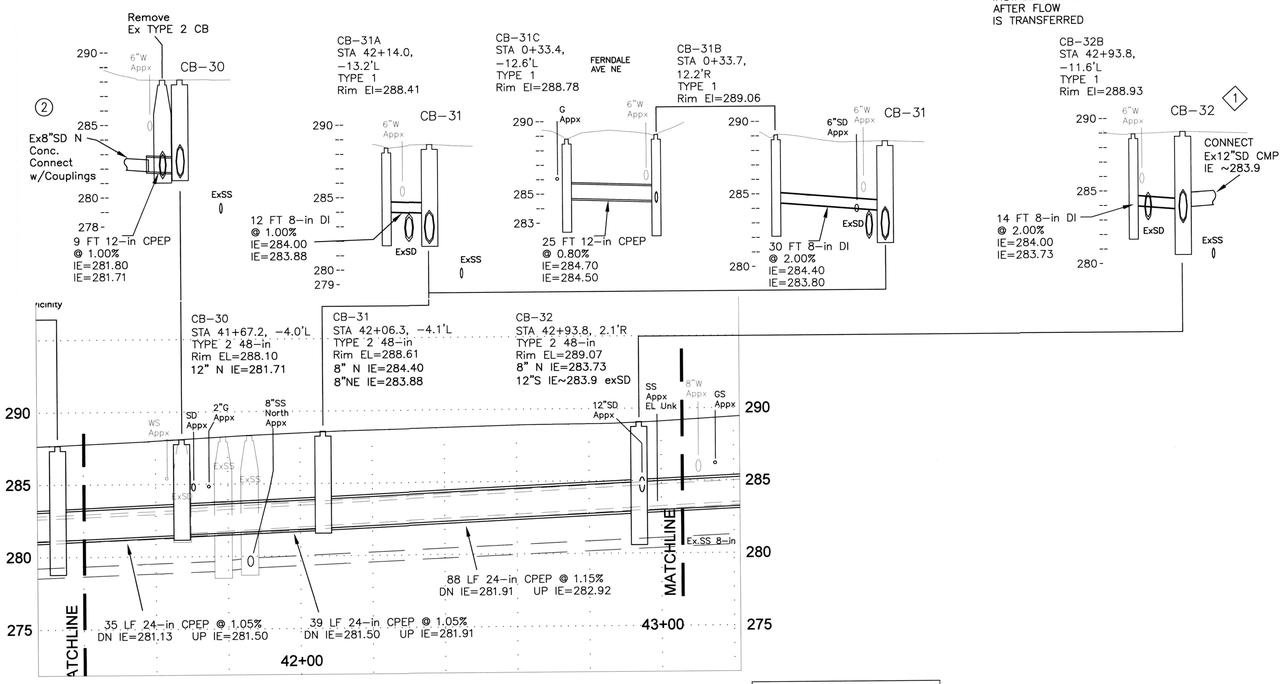

RECOMMENDED
FOR APPROVAL
BY DANIEL CAREY 9/4/13
BY _____

RONALD J. STRAKA
STATE OF WASHINGTON
20742
REGISTERED
PROFESSIONAL ENGINEER
9/6/13

BUSH, ROED & HITCHINGS, INC.
CIVIL ENGINEERS & LAND SURVEYORS
2009 MINOR AVE. EAST
SEATTLE, Washington
98102-3513
(206) 323-4144
1-800-935-0508
FAX# (206) 323-7135
E-MAIL: info@brhinc.com

FILENAME: U:\LDD\2013009\DWG\SS-SUR.dwg

NO.	REVISION	BY	DATE	APPR

SURVEYED: BRH
DESIGNED: DWC
DRAWN: DWC
CHECKED: DWC, RJS
APPROVED: RJS

SCALE: As Noted
ONE INCH AT FULL SCALE IF NOT ONE INCH SCALE ACCORDINGLY

VERTICAL: NAVD 1988
HORIZONTAL: NAD 1983/1991
DATUM

CITY OF RENTON
Planning/Building/Public Works Dept.

NE 5TH PL / EDMONDS AVE NE
STORM SYSTEM REPLACEMENT PROJECT
NE 5th PL STA 41+40 to STA 43+05

DATE: 9-4-13
FIELDBOOK:
PAGE:
DRAWING NO: 2013009.00
SHEET: 12 OF: X

D-2306

CALL 48 HOURS BEFORE YOU DIG
811

EXISTING UTILITY LOCATIONS ARE APPROXIMATE,
NOT ALL UTILTIES MAY BE SHOWN.
CONTRACTOR IS RESPONSIBLE FOR LOCATING ALL UTILITIES.

GENERAL NOTES

1. OVERHEAD UTILITY LINES NOT SHOWN.
2. DO NOT BLOCK DRIVEWAYS EXCEPT WHEN INSTALLING NEW STORM SYSTEM IN FRONT OF THEM.
3. PROTECT/SAVE ANY TREES, PLANTS, LANDSCAPING, MAILBOXES, FENCES AND OTHER IMPROVEMENTS IN CONSTR AREA. RESTORE/REPLACE AFTER CONSTRUCTION.
4. SIDE SEWER LOCATIONS ARE APPROX AND MAY VARY FROM LOCATION SHOWN.
5. SIDE SEWERS IN CONFLICT WITH NEW STORM LINE SHALL BE REBUILT PER SIDE SEWER RELOCATION DETAIL.
6. PIPE LENGTHS, SLOPES ARE MEASURED FROM CENTER OF STRUCTURES.
7. ALL CB RIMS AND GRATES SHALL MATCH EXISTING GRADE UNLESS NOTED OTHERWISE.
8. TYPE 2 CB"s SHALL BE RING AND COVER UNLESS NOTED OTHERWISE.
   TYPE 2 CB AS SHOWN ON PROFILE: 2-FT SUMP, OR NO SUMP.
   TYPE 2 CB MAINLINE IE's GIVEN ON PIPE CALLOUTS.
9. TYPE 1 CB's SHALL BE FRAME AND VANED GRATE UNLESS NOTED OTHERWISE.
   TYPE 1 CB AS SHOWN ON PROFILE: 2-FT SUMP, OR CONCRETE INLET.
   ADJUST CB LOCATION & RIM EL AS NEEDED TO DRAIN, CONFIRM w/INSPECTOR.
10. KEEP ALL EX CB INLETS ACTIVE UNTIL REPLACED BY NEW TYPE 1 CB'S.
11. CONTRACTOR SHALL PROVIDE TEMP STORMWATER BYPASS/PUMPING AS NEEDED.

[= PLUG EX PIPE

CONSTRUCTION NOTES

(1) 1. TEMP EROSION CONTROL: INSTALL CATCH BASIN FILTER FABRIC PER STD PLAN 216.30 AT ALL EX CB'S AND AT NEW CB's WHERE EARTHWORK OCCURS. INSTALL SILT FENCING WHERE NEEDED OR DIRECTED BY CITY.
(2) 2. CONNECT NEW STORM SYSTEM TO EX STORM SYSTEM.
(3) 3. ABANDON EX SD CATCH BASIN TYPE 2 AFTER FLOW IS TRANSFERRED TO NEW STORM SYSTEM.
(4) 4. ABANDON EX SD CATCH BASIN TYPE 1.
(5) 5. REPLACE STREET MONUMENT, IF DAMAGED.
(6) 6. CORE DRILL EX SDMH FOR NEW STORM CONNECTION.
(7) 7. ABANDON BORING/MONITORING WELL, B-1 THRU B-6.
(8) 8. POTHOLE UTILTIY AND SURVEY LOCATION AND ELEVATION. DETERMINE CLEARANCE FROM NEW SD.
(9) 9. PROJECT SIGN.
(20) 20. SEWER TEE REPLACEMENT, SEE DETAIL AND SEWER SCHEDULE. CONTRACTOR TO VERIFY LOCATION OF TEES PRIOR TO EXCAVATION.

RESTORATION NOTES

1. PROTECT/SAVE ANY PLANTS, LANDSCAPING, MAILBOXES, FENCES AND OTHER IMPROVEMENTS IN CONSTR AREA. RESTORE/REPLACE AFTER CONSTRUCTION.
(2) 2. ALL DISTURBED GRASS AREA SHALL BE RESTORED WITH SOD.
(3) 3. ALL DISTURBED GRAVEL AREAS SHALL BE RESTORED WITH CRUSHED SURFACE BASE COURSE (WSDOT 9-03.9(3)).
4. TRENCH PATCH SHALL BE PER DETAIL TYPICAL PATCH FOR FLEXIBLE PAVEMENT (PER STD PLAN 110).
5. CITY MAY REQUIRE DAMAGED ASPHALT OUTSIDE OF TRENCH PATCH AREA TO BE REMOVED AND REPLACED, AS NEEDED.
6. ALL CURB, GUTTER, SIDEWALK, AND DRIVEWAY RESTORATION SHALL MATCH EXISTING TYPE AND DIMENSIONS, UNLESS NOTED OTHERWISE. SAWCUT EXTENT AS DIRECTED BY CITY.
(7) 7. RESTORE CONC CURB, GUTTER, SIDEWALK.
(8) 8. RESTORE CONC SIDEWALK (ASPHALT CURB OR NO CURB).
(9) 9. RESTORE CONC DRIVEWAY (ASPHALT CURB OR NO CURB).

SHEET NOTES

(1) 1. AJDUST CB-32 LOCATION AS NEEDED TO INTERCEPT EX 12"SD.

D-230612

DRAWING NUMBER

SWP-27-2306
STORM SYSTEM IMPROVEMENT PROJECT
NE 5 TH Edmonds Ave NE
Page 12

DRAWING NUMBER

DRAW

SWP-27-2306

PROJECT NAME

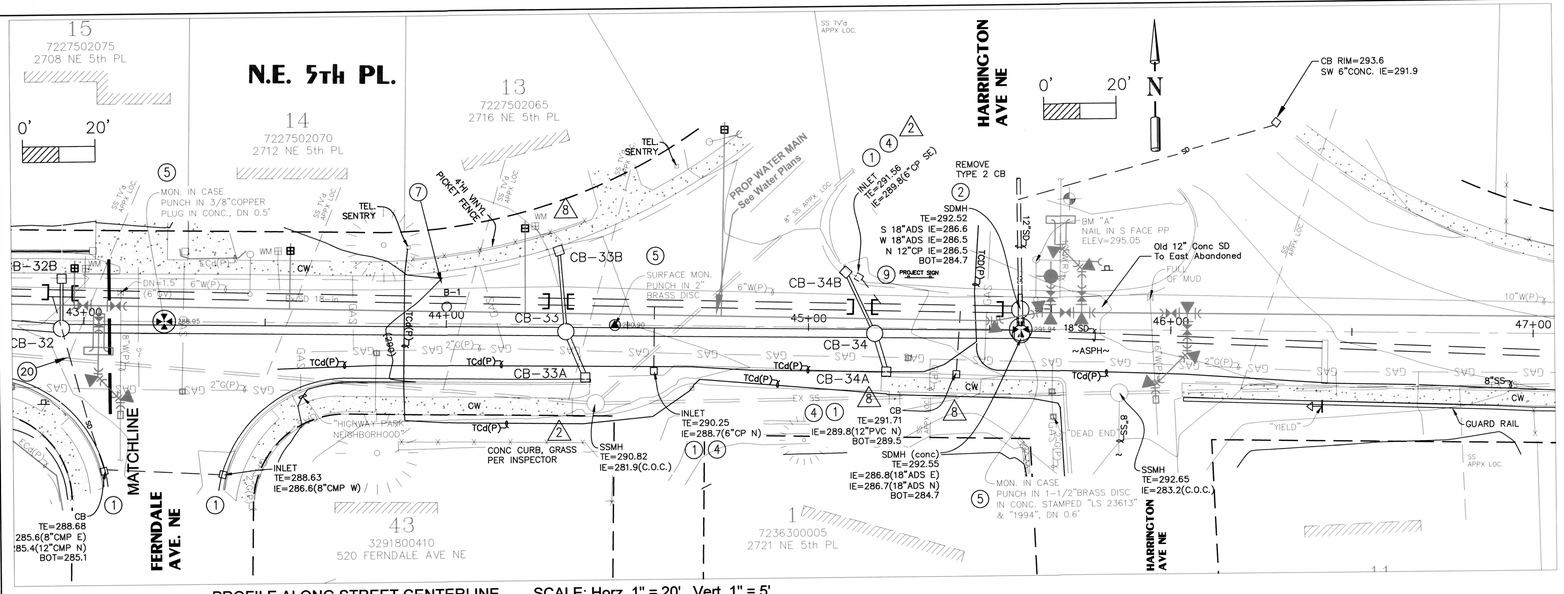

PROFILE ALONG STREET CENTERLINE SCALE: Horz. 1" = 20' Vert. 1" = 5'

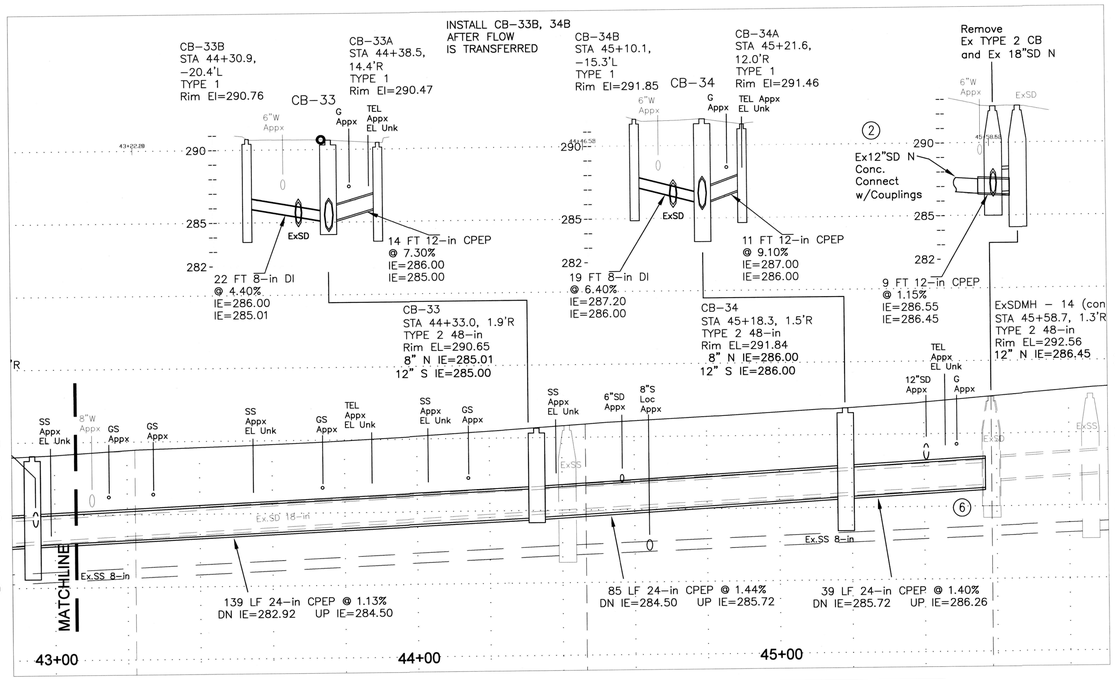

CALL 48 HOURS BEFORE YOU DIG
811

EXISTING UTILITY LOCATIONS ARE APPROXIMATE,
NOT ALL UTILITIES MAY BE SHOWN.
CONTRACTOR IS RESPONSIBLE FOR LOCATING ALL UTILITIES.

GENERAL NOTES

1. OVERHEAD UTILITY LINES NOT SHOWN.
2. DO NOT BLOCK DRIVEWAYS EXCEPT WHEN INSTALLING NEW STORM SYSTEM IN FRONT OF THEM.
3. PROTECT/SAVE ANY TREES, PLANTS, LANDSCAPING, MAILBOXES, FENCES AND OTHER IMPROVEMENTS IN CONSTR AREA. RESTORE/REPLACE AFTER CONSTRUCTION.
4. SIDE SEWER LOCATIONS ARE APPROX AND MAY VARY FROM LOCATION SHOWN.
5. SIDE SEWERS IN CONFLICT WITH NEW STORM LINE SHALL BE REBUILT PER SIDE SEWER RELOCATION DETAIL.
6. PIPE LENGTHS, SLOPES ARE MEASURED FROM CENTER OF STRUCTURES.
7. ALL CB RIMS AND GRATES SHALL MATCH EXISTING GRADE UNLESS NOTED OTHERWISE.
8. TYPE 2 CB"s SHALL BE RING AND COVER UNLESS NOTED OTHERWISE.
   TYPE 2 CB AS SHOWN ON PROFILE: 2-FT SUMP, OR NO SUMP.
   TYPE 2 CB MAINLINE IE's GIVEN ON PIPE CALLOUTS.
9. TYPE 1 CB's SHALL BE FRAME AND VANED GRATE UNLESS NOTED OTHERWISE.
   TYPE 1 CB AS SHOWN ON PROFILE: 2-FT SUMP, OR CONCRETE INLET.
   ADJUST CB LOCATION & RIM EL AS NEEDED TO DRAIN, CONFIRM w/INSPECTOR.
10. KEEP ALL EX CB INLETS ACTIVE UNTIL REPLACED BY NEW TYPE 1 CB'S.
11. CONTRACTOR SHALL PROVIDE TEMP STORMWATER BYPASS/PUMPING AS NEEDED.

[= PLUG EX PIPE

CONSTRUCTION NOTES

(1) 1. TEMP EROSION CONTROL: INSTALL CATCH BASIN FILTER FABRIC PER STD PLAN 216.30 AT ALL EX CB'S AND AT NEW CB's WHERE EARTHWORK OCCURS. INSTALL SILT FENCING WHERE NEEDED OR DIRECTED BY CITY.
(2) 2. CONNECT NEW STORM SYSTEM TO EX STORM SYSTEM.
(3) 3. ABANDON EX SD CATCH BASIN TYPE 2 AFTER FLOW IS TRANSFERRED TO NEW STORM SYSTEM.
(4) 4. ABANDON EX SD CATCH BASIN TYPE 1.
(5) 5. REPLACE STREET MONUMENT, IF DAMAGED.
(6) 6. CORE DRILL EX SDMH FOR NEW STORM CONNECTION.
(7) 7. ABANDON BORING/MONITORING WELL, B-1 THRU B-6.
(8) 8. POTHOLE UTILTIY AND SURVEY LOCATION AND ELEVATION. DETERMINE CLEARANCE FROM NEW SD.
(9) 9. PROJECT SIGN.
(20) 20. SEWER TEE REPLACEMENT, SEE DETAIL AND SEWER SCHEDULE. CONTRACTOR TO VERIFY LOCATION OF TEES PRIOR TO EXCAVATION.

RESTORATION NOTES

1. PROTECT/SAVE ANY PLANTS, LANDSCAPING, MAILBOXES, FENCES AND OTHER IMPROVEMENTS IN CONSTR AREA. RESTORE/REPLACE AFTER CONSTRUCTION.
(A) 2. ALL DISTURBED GRASS AREA SHALL BE RESTORED WITH SOD.
(A) 3. ALL DISTURBED GRAVEL AREAS SHALL BE RESTORED WITH CRUSHED SURFACE BASE COURSE (WSDOT 9-03.9(3)).
4. TRENCH PATCH SHALL BE PER DETAIL TYPICAL PATCH FOR FLEXIBLE PAVEMENT (PER STD PLAN 110).
5. CITY MAY REQUIRE DAMAGED ASPHALT OUTSIDE OF TRENCH PATCH AREA TO BE REMOVED AND REPLACED, AS NEEDED.
6. ALL CURB, GUTTER, SIDEWALK, AND DRIVEWAY RESTORATION SHALL MATCH EXISTING TYPE AND DIMENSIONS, UNLESS NOTED OTHERWISE. SAWCUT EXTENT AS DIRECTED BY CITY.
(A) 7. RESTORE CONC CURB, GUTTER, SIDEWALK.
(A) 8. RESTORE CONC SIDEWALK (ASPHALT CURB OR NO CURB).
(A) 9. RESTORE CONC DRIVEWAY (ASPHALT CURB OR NO CURB).

SHEET NOTES

(1) 1. -

D-230613

RECOMMENDED FOR APPROVAL
BY DANIEL CAREY 9/4/13
BY _____

RONALD J. STRANEY STATE OF WASHINGTON 19787 REGISTERED PROFESSIONAL ENGINEER
9/6/13

BUSH, ROED & HITCHINGS, INC.
CIVIL ENGINEERS & LAND SURVEYORS
2009 MINOR AVE. EAST
SEATTLE, Washington
98102-3513
(206) 323-4144
1-800-935-0508
FAX# (206) 323-7135
E-MAIL: info@brhinc.com

NO.	REVISION	BY	DATE	APPR

SURVEYED: BRH
DESIGNED: DWC
DRAWN: DWC
CHECKED: DWC, RJS
APPROVED: RJS

SCALE: As Noted
ONE INCH AT FULL SCALE IF NOT ONE INCH SCALE ACCORDINGLY

VERTICAL: NAVD 1988
HORIZONTAL: NAD 1983/1991
DATUM

CITY OF RENTON
Planning/Building/Public Works Dept.

NE 5TH PL / EDMONDS AVE NE
STORM SYSTEM REPLACEMENT PROJECT
NE 5th PL STA 43+05 to STA 45+65

DATE: 9-4-13
FIELDBOOK:
PAGE:
DRAWING NO: 2013009.00
SHEET: 13 OF: x

D-2306

FILENAME: U:\LDD\2013\2013009.DWG\XS-SUR.dwg

SWP-27-2306
STORM SYSTEM IMPROVEMENT PROJECT
NE 5th PlEdmonds Ave NE
Page 13

DRAWING NUMBER

SWP-27-2306

PROJECT NAME

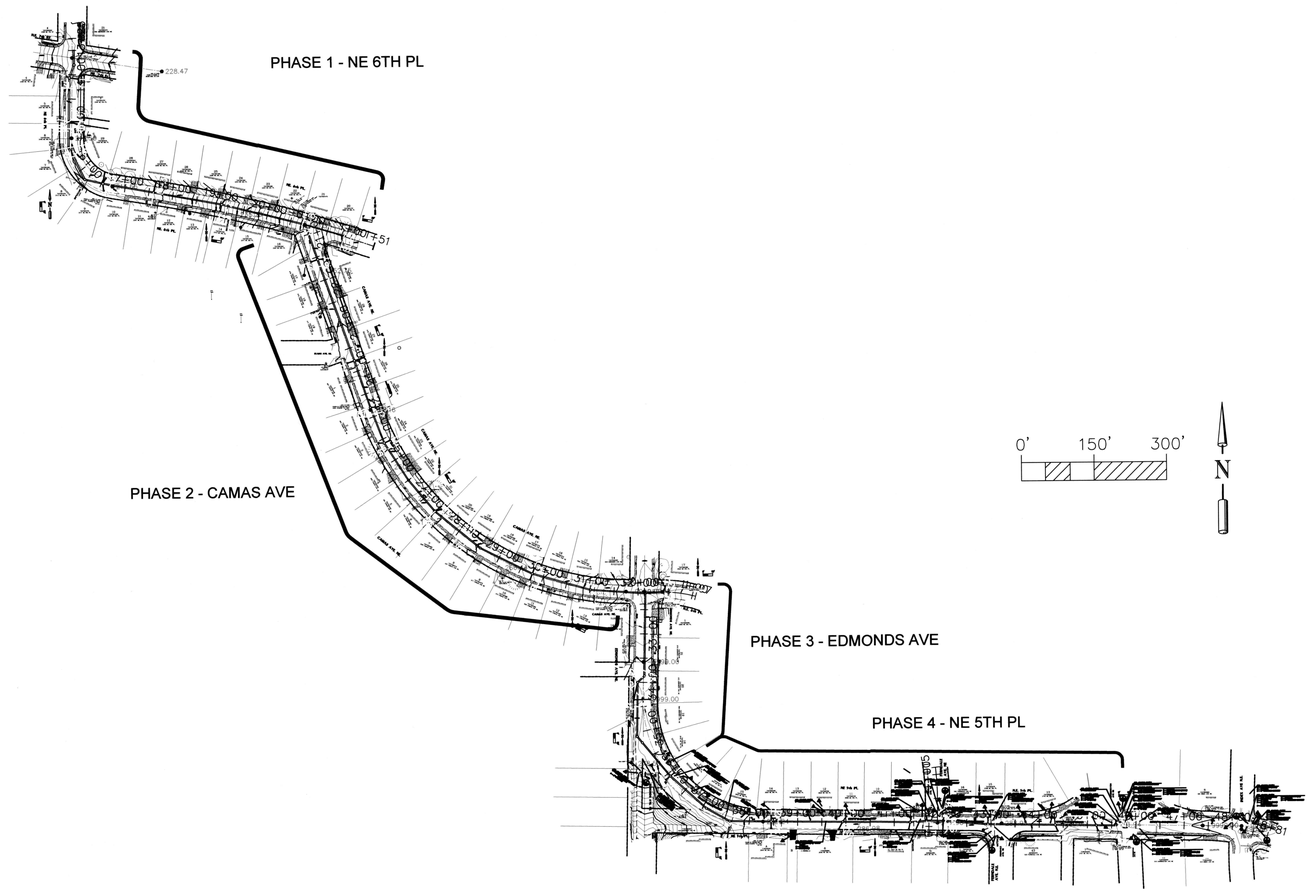

PAVING NOTES

1. TEMPORARY HOT PATCHES SHALL BE PLACED AS THE NEW STORM SYSTEM IS INSTALLED. USE COLD MIX PATCHES SHALL BE LIMITED TO ACTIVE WORK AREA.
2. PERMANENT TRENCH PATCH SHALL BE PER DETAIL TYPICAL PATCH FOR FLEXIBLE PAVEMENT (PER STD PLAN 110).
3. CITY MAY REQUIRE DAMAGED ASPHALT OUTSIDE OF TRENCH PATCH AREA TO BE REMOVED AND REPLACED AS NEEDED.
4. CONTRACTOR SHALL PLAN THE WORK TO PLACE THE PERMANENT ASPHALT TRENCH PATCH IN PHASES AS THE NEW STORM SYSTEM IS INSTALLED. THE PERMANENT TRENCH PATCH SHALL BE COMPLETED IN EACH PHASE BEFORE STARTING WORK TO INSTALL THE STORM SYSTEM IN THE NEXT PHASE. PHASING SHALL BE AS SHOWN OR OTHERWISE APPROVED BY THE CITY.
5. ALL NEW STORM WATER STRUCTURES SHALL BE INSTALLED FOR EACH PHASE BEFORE PAVING OCCURS, UNLESS APPROVED OTHERWISE BY CITY.

295

290

285

280

RECOMMENDED FOR APPROVAL
BY DANIEL CAREY 9/4/13
BY

RONALD J. STRAUB
STATE OF WASHINGTON
20927
REGISTERED PROFESSIONAL ENGINEER
9/6/13

D-230614

BUSH, ROED & HITCHINGS, INC.
CIVIL ENGINEERS & LAND SURVEYORS
2009 MINOR AVE. EAST
SEATTLE, Washington
98102-3513
(206) 323-4144
1-800-935-0508
FAX# (206) 323-7135
E-MAIL: info@brhinc.com

NO.	REVISION	BY	DATE	APPR

SURVEYED: BRH
DESIGNED: DWC
DRAWN: DWC
CHECKED: DWC, RJS
APPROVED: RJS

SCALE: As Noted
ONE INCH AT FULL SCALE IF NOT ONE INCH SCALE ACCORDINGLY

VERTICAL: NAVD 1988
HORIZONTAL: NAD 1983/1991
DATUM

CITY OF RENTON
Planning/Building/Public Works Dept.

NE 5TH PL / EDMONDS AVE NE
STORM SYSTEM REPLACEMENT PROJECT

PAVING PHASING

DATE: 9-4-13
FIELDBOOK:
PAGE:
DRAWING NO: 2013009.00
SHEET: 14 OF: x

D-2306

FILENAME: U:\LDD\2013009\DWG\XS-SUR.dwg

SWP-27-2306
STORM SYSTEM IMPROVEMENT PROJECT
NE 5th Pl/Edmonds Ave NE
Page 14

DRAWING NUMBER
SAFCO PRODUCTS • NEW HOPE, MINNESOTA
RECORDER BY PART NUMBER 8552

DRAWING NUMBER
NEW HOPE, MINNESOTA
NUMBER 8552

DRAW
SAFCO PRODUCTS
RECORDER

SWP-27-2306

PROJECT NAME

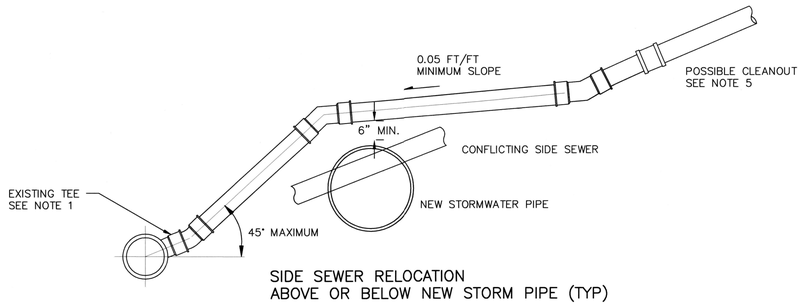

SIDE SEWER RELOCATION
ABOVE OR BELOW NEW STORM PIPE (TYP)

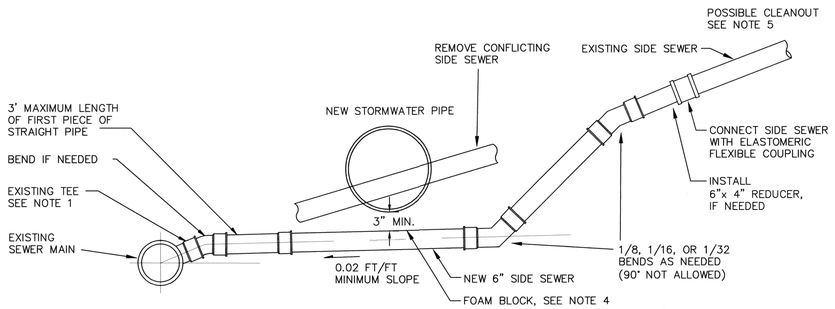

NOTES:
1. IF EXISTING TEE IS NOT USEABLE FOR RECONNECTION CONTRACTOR SHALL CUT IN A NEW TEE REPLACEMENT.
2. CONCRETE BLOCK REQUIRED AT NEW SADDLE WHEN ANGLE AT MAIN EXCEEDS 25°. SEE CITY DETAIL DWG 406.1.
3. ALLOWABLE SIDE SEWER PIPE AND FITTINGS:
   POLYVINYL CHLORIDE (PVC) SDR 35, OR OTHER MATERIAL, AS APPROVED BY CITY INSPECTOR.
4. FOR 3" SEPARATION INSTALL 1'X 2' X 2" THICK STYRENE FOAM BLOCK BETWEEN NEW PIPE AND 6" SIDE SEWER RELOCATION.
5. IF SIDE SEWER RELOCATION REACHES CURB EXTEND NEW 6" SS TO BEHIND SIDEWALK AND INSTALL CLEANOUT PER CITY DETAIL DWG 406.1, 407.
6. BEDDING SHALL BE WSDOT 9-03.12(4) GRAVEL BACKFILL FOR DRAINS.
7. ALL SIDE SEWER RECONSTRUCTIONS SHALL BE APPROVED BY CITY INSPECTOR

SIDE SEWER RELOCATION (TYP)
(NTS)

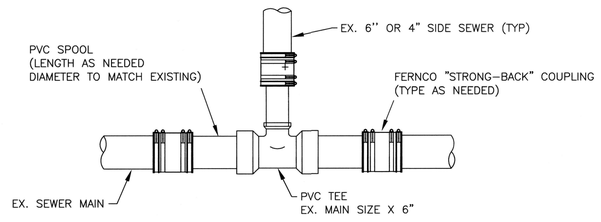

1. BEDDING SHALL BE PER WSDOT SPECIFICATION 9-03.12(4) GRAVEL BACKFILL FOR DRAINS.

SEWER TEE REPLACEMENT DETAIL (TYP)
(NTS)

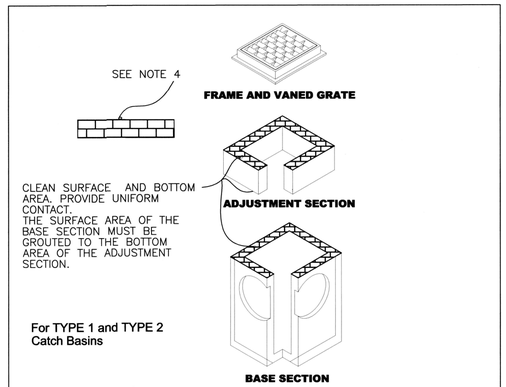

NOTES
1. THE COVER OR GRATING OF A CATCH BASIN SHALL NOT BE GROUTED TO FINAL GRATE UNTIL THE FINAL ELEVATION OF THE PAVEMENT, GUTTER, DITCH, OR SIDEWALK IN WHICH IT IS TO BE PLACED HAS BEEN ESTABLISHED, AND UNTIL PERMISSION THEREAFTER IS GIVEN BY THE ENGINEER TO GROUT THE COVER OR GRATING IN PLACE PER WSDOT STANDARD SPECIFICATION 7-05.3.
2. SHIMS SHALL NOT BE USED TO SET FRAME TO GRADE. THE USE OF SHIMS IS PROHIBITED.
3. MORTAR SHALL BE PLACED BETWEEN ADJUSTMENT RINGS AND BRICKS PRIOR TO PLACEMENT.
4. THE USE OF BRICKS IS PERMITTED WHERE THE BRICKS ARE STAGGERED TO CREATE A RUNNING BOND OR ½ BOND.

PUBLIC WORKS DEPARTMENT	CATCH BASIN INSTALLATION	STD. PLAN – 202.00
		MARCH 2008

CATCH BASIN INSTALLATION (TYP)
STD PLAN 202.00 (NTS)

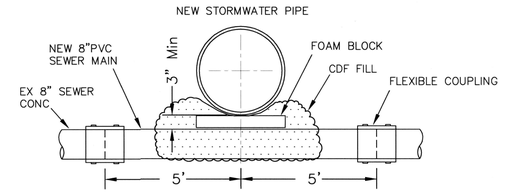

NOTES:
1. ALLOWABLE SEWER PIPE AND FITTINGS:
   POLYVINYL CHLORIDE (PVC) SDR 35
   OTHER MATERIAL, AS APPROVED BY CITY INSPECTOR.
2. INSTALL 1'x 2'x 2" THICK STYRENE FOAM BLOCK BETWEEN NEW SD PIPE AND NEW SEWER MAIN.
3. FLEXIBLE COUPLING SHALL BE FERNCO "STRONG-BACK" COUPLING, TYPE AS NEEDED.
4. BACKFILL CROSSING WITH CDF, DO NOT COVER COUPLINGS.

SEWER MAIN CROSSING (TYP)
(NTS)

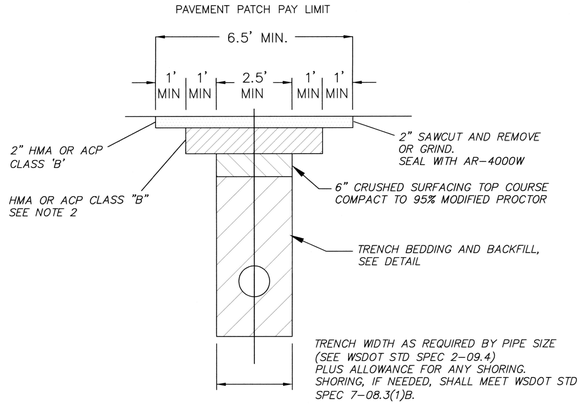

NOTES:
2. MINIMUM THICKNESS AND MATERIAL SHALL BE:
   PRINCIPAL/MINOR/COLLECTOR, ARTERIAL & INDUSTRIAL ACCESS STREETS – 6"HMA OR ACP CLASS "B",
   RESIDENTIAL ACCESS STREETS – 2" HMA OR ACP CLASS "B",
   IN NO CASE SHALL THE THICKNESS BE LESS THAN THE EXISTING PAVEMENT SECTION.

TYPICAL PATCH FOR FLEXIBLE PAVEMENT
PER STD PLAN – 110 (NTS)

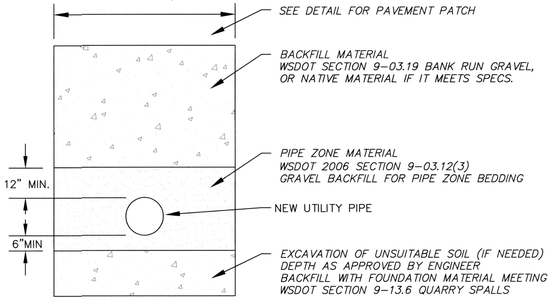

NOTES
1. PROVIDE UNIFORM SUPPORT UNDER BARREL.
2. HAND TAMP UNDER HAUNCHES.
3. COMPACT PIPE ZONE MATERIAL TO 95% MAXIMUM DENSITY EXCEPT DIRECTLY OVER PIPE WHERE COMPACTION WILL BE HAND TAMP ONLY.
4. PIPE MUST BE ANCHORED IN SUCH A MANNER AS TO ENSURE THAT THE FLOW LINE IS MAINTAINED.

TYPICAL TRENCH BEDDING AND BACKFILL
(NTS)

D-230615

RECOMMENDED
FOR APPROVAL
BY DANIEL CAREY 9/4/13
BY _____

RONALD J. STRAKA
STATE OF WASHINGTON
22777
REGISTERED
PROFESSIONAL ENGINEER
9/6/13

BUSH, ROED & HITCHINGS, INC.
CIVIL ENGINEERS & LAND SURVEYORS
2009 MINOR AVE. EAST
SEATTLE, Washington
98102-3513
(206) 323-4144
1-800-935-0508
FAX# (206) 323-7135
E-MAIL: info@brhinc.com

NO.	REVISION	BY	DATE	APPR

SURVEYED: BRH
DESIGNED: DWC
DRAWN: DWC
CHECKED: DWC, RJS
APPROVED: RJS

SCALE: As Noted
ONE INCH AT FULL SCALE IF NOT ONE INCH SCALE ACCORDINGLY

VERTICAL: NAVD 1988
HORIZONTAL: NAD 1983/1991
DATUM

CITY OF RENTON
Planning/Building/Public Works Dept.

NE 5TH PL / EDMONDS AVE NE
STORM SYSTEM REPLACEMENT PROJECT
STORM DETAILS

DATE: 9-4-13
FIELDBOOK:
PAGE:
DRAWING NO: 2013009.00
SHEET: 15 OF: x

D-2306

FILENAME: U:\LDD\2013009\DWG\XS-SUR.dwg

DRAWING NUMBER
SWP-27-2306
STORM SYSTEM IMPROVEMENT PROJECT
NE 5th Pl/Edmonds Ave NE
Page 15
DRAWING

WTR-27-3673

PROJECT NAME

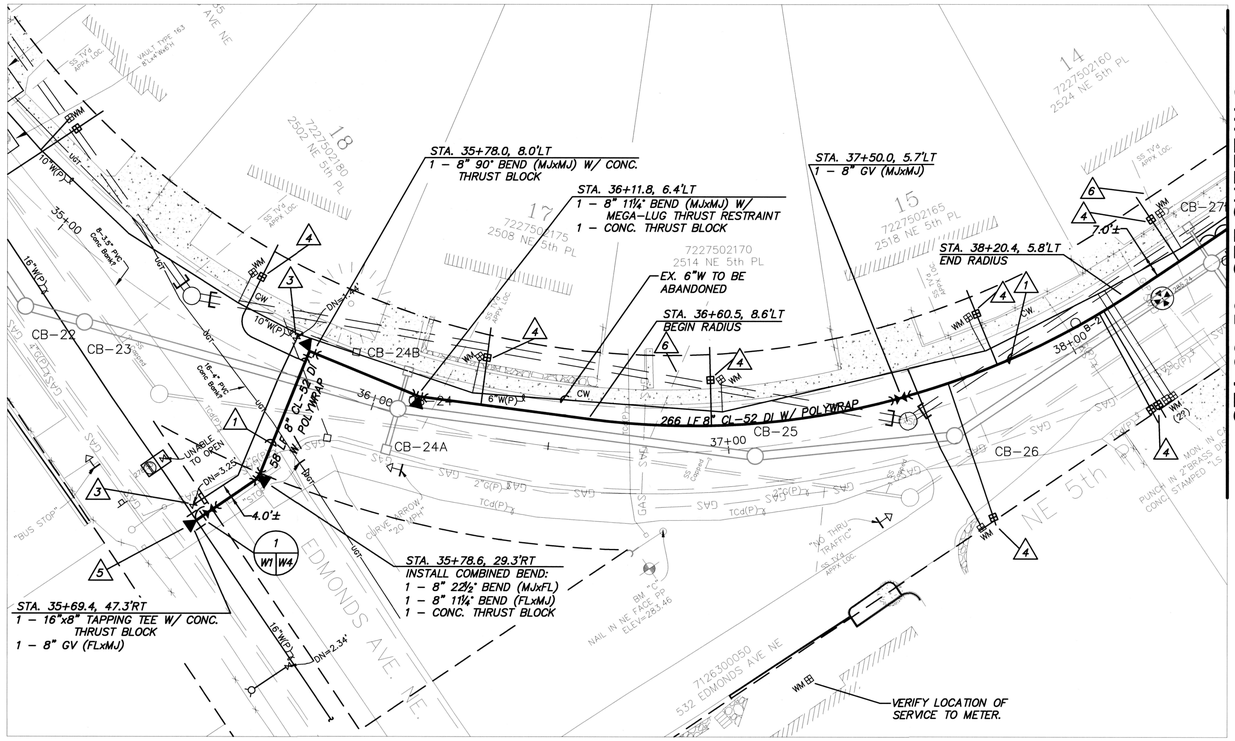

STA 38+50 - SEE SHEET W-2

0 20 40
1"=20'

WATER NOTES:

1. 3' COVER MINIMUM. (TYP.), UNLESS OTHERWISE SPECIFIED.
2. REMOVE EXISTING FIRE HYDRANT.
3. CLOSE VALVE AND REMOVE EX. VALVE BOX. (TYPICAL FOR ABANDONED VALVES)
4. REPLACE EXISTING ¾" WATER SERVICE WITH NEW 1" WATER SERVICE PER STANDARD DETAIL 320.1. (TYPICAL FOR ALL SERVICES) CONNECT NEW METER SETTER AND NEW COPPER TAIL PIECE TO CUSTOMER PRIVATE SERVICE LINE.
5. POTHOLE IN THIS LOCATION AHEAD OF WATER MAIN INSTALLATION TO ESTABLISH LINE AND GRADE.
6. APPROXIMATE LOCATION OF EXISTING SANITARY SEWER SERVICE BASED ON AS-BUILT DRAWINGS (TYP.). SIDE SEWERS ARE AT APPROX. 2'-5' DEPTH. CONTRACTOR SHALL POTHOLE IN ADVANCE TO DETERMINE EXACT LOCATION AND DEPTH. LOCATE WATER MAIN PIPE JOINT A MINIMUM OF 6' FROM SEWER CROSSING, OR AS APPROVED BY ENGINEER. CONTRACTOR SHALL REPAIR DAMAGED SIDE SEWERS AT OWN EXPENSE AS FOLLOWS:

-VITRIFIED CLAY: RE-SECTIONED WITH PVC PIPE SPOOL AND FLEXIBLE FERNCO COUPLINGS

-CONCRETE: RE-SECTIONED WITH ROMAC SADDLE

-PVC: RE-SECTIONED WITH RIGID COUPLINGS OR A ROMAC SADDLE

GENERAL NOTES

1. ALL NEW WATER PIPE AND FITTINGS SHALL HAVE A FOAM PIPE PIG RUN THROUGH THEM BEFORE BEING FLUSHED, DISINFECTED, AND PRESSURE TESTED. THE CONTRACTOR SHALL NOTIFY THE CITY OF RENTON WATER MAINTENANCE DEPARTMENT TWO WEEKS BEFORE MAKING A CUT-IN CONNECTION TO AN EXISTING WATER MAIN AND 5 DAYS BEFORE MAKING A CONNECTION TO A NEWLY CUT-IN TEE AND VALVE(S) ON THE EXISTING MAIN. ALL PIPE AND FITTINGS NOT TO BE DISINFECTED IN PLACE SHALL BE SWABBED WITH 1% CHLORINE SOLUTION PRIOR TO INSTALLATION.
2. AFTER DISINFECTING THE WATERMAIN, DISPOSE OF CHLORINATED WATER BY DISCHARGING TO THE NEAREST OPERATING SANITARY SEWER.
3. DEFLECT THE WATERMAIN ABOVE OR BELOW EXISTING UTILITIES AS REQUIRED TO MAINTAIN 3FT MINIMUM COVER, 12 IN. MINIMUM VERTICAL CLEARANCE BETWEEN UTILITIES UNLESS OTHERWISE SPECIFIED.
4. ALL FITTINGS SHALL BE BLOCKED PER CITY OF RENTON STANDARD DETAILS UNLESS OTHERWISE NOTED.

RECOMMENDED FOR APPROVAL
BY _____
BY _____

BUSH, ROED & HITCHINGS, INC.
CIVIL ENGINEERS & LAND SURVEYORS
2009 MINOR AVE. EAST
SEATTLE, Washington
98102-3513
(206) 323-4144
1-800-935-0508
FAX# (206) 323-7135
E-MAIL: info@brhinc.com

ANDREW V. WEYRICH — STATE OF WASHINGTON — 43883 — REGISTERED PROFESSIONAL ENGINEER
9/4/2013

NO.	REVISION	BY	DATE	APPR

SURVEYED: BRH
DESIGNED: AW
DRAWN: AW
CHECKED: AW, AG
APPROVED: AG

SCALE: As Noted
ONE INCH AT FULL SCALE. IF NOT ONE INCH SCALE ACCORDINGLY

VERTICAL: NAVD 1988
HORIZONTAL: NAD 1983/1991
DATUM

CITY OF RENTON
Planning/Building/Public Works Dept.

NE 5TH PL
WATER MAIN REPLACEMENT PROJECT
EDMONDS AVE / NE 5TH PL STA 35+70 to 38+50

DATE: 9-4-13
FIELDBOOK:
PAGE:
DRAWING NO: 2013009.00
SHEET: W-1 OF: 5

W-367301

W-3673

FILENAME: U:\JOB\2013000\DWG\XS-SUR.dwg

WTR-27-3673

WATER MAIN REPLACEMENT PROJECT
NE 5TH PL
Page 01

DRAWING NUMBER

SAFCO PRODUCTS • NEW HOPE, MINNESOTA
PART NUMBER 60150
RECORDS RETENTION LABEL

DRAWING NUMBER

SAFCO PRODUCTS • NEW HOPE, MINNESOTA
PART NUMBER 60150
RECORDS RETENTION LABEL

DRAWII

WTR-27-3673

PROJECT NAME

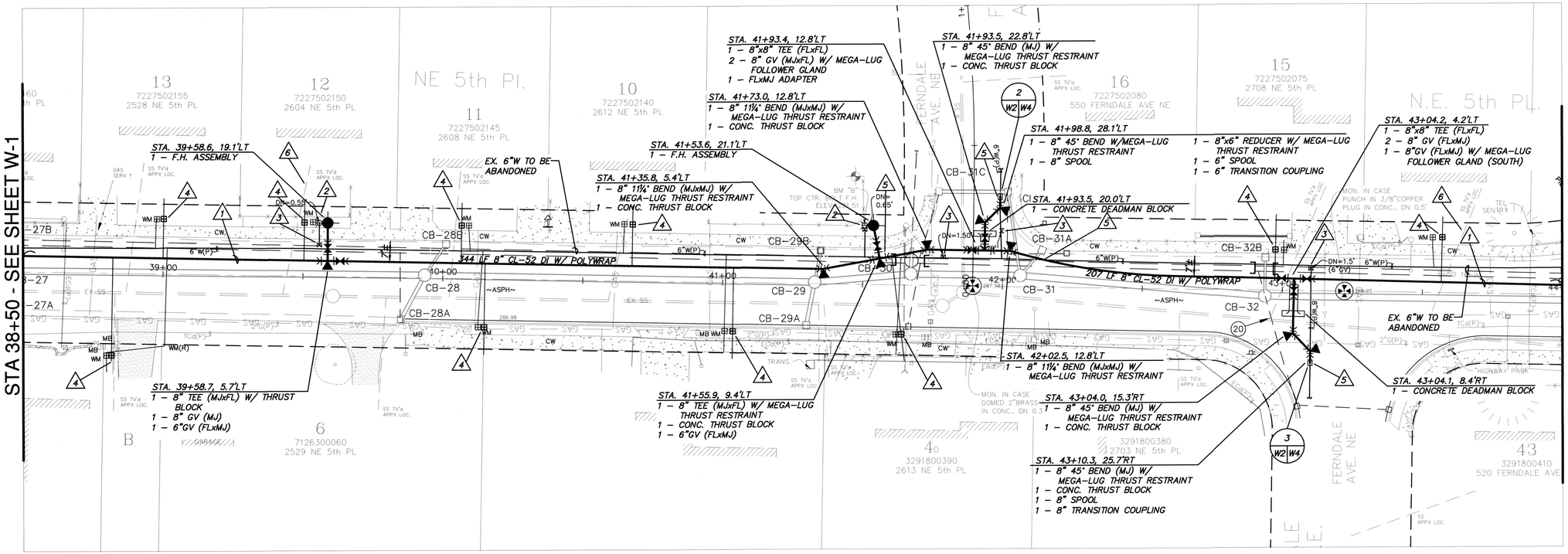

WATER NOTES:

1. 3' COVER MINIMUM. (TYP.), UNLESS OTHERWISE SPECIFIED.
2. REMOVE EXISTING FIRE HYDRANT.
3. CLOSE VALVE AND REMOVE EX. VALVE BOX. (TYPICAL FOR ABANDONED VALVES)
4. REPLACE EXISTING ¾" WATER SERVICE WITH NEW 1" WATER SERVICE PER STANDARD DETAIL 320.1. (TYPICAL FOR ALL SERVICES) CONNECT NEW METER SETTER AND NEW COPPER TAIL PIECE TO CUSTOMER PRIVATE SERVICE LINE.
5. POTHOLE IN THIS LOCATION AHEAD OF WATER MAIN INSTALLATION TO ESTABLISH LINE AND GRADE.
6. APPROXIMATE LOCATION OF EXISTING SANITARY SEWER SERVICE BASED ON AS-BUILT DRAWINGS (TYP.). SIDE SEWERS ARE AT APPROX. 2'-5' DEPTH. CONTRACTOR SHALL POTHOLE IN ADVANCE TO DETERMINE EXACT LOCATION AND DEPTH. LOCATE WATER MAIN PIPE JOINT A MINIMUM OF 6' FROM SEWER CROSSING, OR AS APPROVED BY ENGINEER. CONTRACTOR SHALL REPAIR DAMAGED SIDE SEWERS AT OWN EXPENSE AS FOLLOWS:

–VITRIFIED CLAY: RE-SECTIONED WITH PVC PIPE SPOOL AND FLEXIBLE FERNCO COUPLINGS

–CONCRETE: RE-SECTIONED WITH ROMAC SADDLE

–PVC: RE-SECTIONED WITH RIGID COUPLINGS OR A ROMAC SADDLE

GENERAL NOTES

1. ALL NEW WATER PIPE AND FITTINGS SHALL HAVE A FOAM PIPE PIG RUN THROUGH THEM BEFORE BEING FLUSHED, DISINFECTED, AND PRESSURE TESTED. THE CONTRACTOR SHALL NOTIFY THE CITY OF RENTON WATER MAINTENANCE DEPARTMENT TWO WEEKS BEFORE MAKING A CUT-IN CONNECTION TO AN EXISTING WATER MAIN AND 5 DAYS BEFORE MAKING A CONNECTION TO A NEWLY CUT-IN TEE AND VALVE(S) ON THE EXISTING MAIN. ALL PIPE AND FITTINGS NOT TO BE DISINFECTED IN PLACE SHALL BE SWABBED WITH 1% CHLORINE SOLUTION PRIOR TO INSTALLATION.
2. AFTER DISINFECTING THE WATERMAIN, DISPOSE OF CHLORINATED WATER BY DISCHARGING TO THE NEAREST OPERATING SANITARY SEWER.
3. DEFLECT THE WATERMAIN ABOVE OR BELOW EXISTING UTILITIES AS REQUIRED TO MAINTAIN 3FT MINIMUM COVER, 12 IN. MINIMUM VERTICAL CLEARANCE BETWEEN UTILITIES UNLESS OTHERWISE SPECIFIED.
4. ALL FITTINGS SHALL BE BLOCKED PER CITY OF RENTON STANDARD DETAILS UNLESS OTHERWISE NOTED.

RECOMMENDED FOR APPROVAL

BY _____

BY _____

STATE OF WASHINGTON ANDREW V. MEYERHOFF 44863 REGISTERED PROFESSIONAL ENGINEER
9/6/2013

BUSH, ROED & HITCHINGS, INC.
CIVIL ENGINEERS & LAND SURVEYORS
2009 MINOR AVE. EAST
SEATTLE, Washington
98102-3513
(206) 323-4144
1-800-935-0508
FAX# (206) 323-7135
E-MAIL: info@bhinc.com

NO.	REVISION	BY	DATE	APPR

SURVEYED: BRH
DESIGNED: AW
DRAWN: AW
CHECKED: AW, AG
APPROVED: LH

SCALE: As Noted
ONE INCH AT FULL SCALE IF NOT ONE INCH SCALE ACCORDINGLY

VERTICAL: NAVD 1988
HORIZONTAL: NAD 1983/1991
DATUM

CITY OF RENTON
Planning/Building/Public Works Dept.

NE 5TH PL
WATER MAIN REPLACEMENT PROJECT
EDMONDS AVE / NE 5TH PL STA 38+50 to 44+00

DATE: 9-4-13
FIELDBOOK:
PAGE:
DRAWING NO: 2013009.00
SHEET: W-2 OF 5

W-3673

W-367302

FILENAME: U:\DEV\2013009\DWG\WTR-SUR.dwg

WTR-27-3673
WATER MAIN REPLACEMENT PROJECT
NE 5TH PL
Page 02

DRAWING NUMBER

SAFCO PRODUCTS • NEW HOPE, MINNESOTA
RECORDS RETENTION GUIDE

WTR-27-3673

PROJECT NAME

STA 44+00 - SEE SHEET W-2

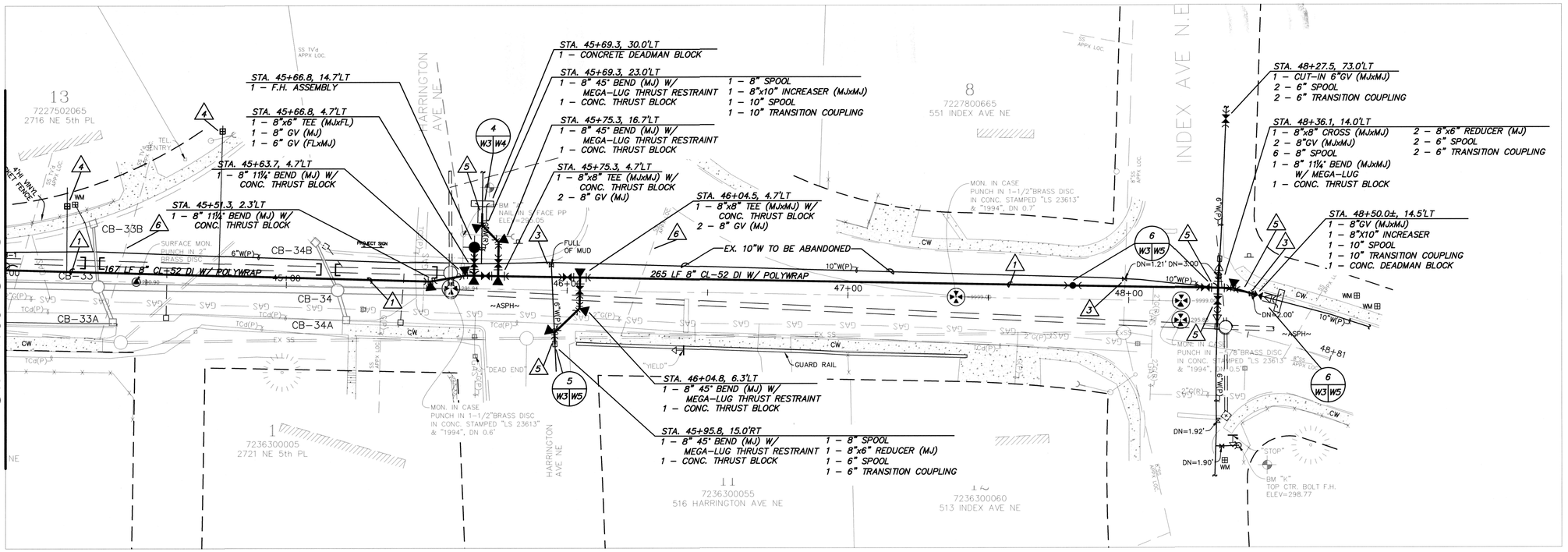

WATER NOTES:

1. 3' COVER MINIMUM. (TYP.), UNLESS OTHERWISE SPECIFIED.
2. REMOVE EXISTING FIRE HYDRANT.
3. CLOSE VALVE AND REMOVE EX. VALVE BOX. (TYPICAL FOR ABANDONED VALVES)
4. REPLACE EXISTING ¾" WATER SERVICE WITH NEW 1" WATER SERVICE PER STANDARD DETAIL 320.1. (TYPICAL FOR ALL SERVICES) CONNECT NEW METER SETTER AND NEW COPPER TAIL PIECE TO CUSTOMER PRIVATE SERVICE LINE.
5. POTHOLE IN THIS LOCATION AHEAD OF WATER MAIN INSTALLATION TO ESTABLISH LINE AND GRADE.
6. APPROXIMATE LOCATION OF EXISTING SANITARY SEWER SERVICE BASED ON AS-BUILT DRAWINGS (TYP.). SIDE SEWERS ARE AT APPROX. 2'-5' DEPTH. CONTRACTOR SHALL POTHOLE IN ADVANCE TO DETERMINE EXACT LOCATION AND DEPTH. LOCATE WATER MAIN PIPE JOINT A MINIMUM OF 6' FROM SEWER CROSSING, OR AS APPROVED BY ENGINEER. CONTRACTOR SHALL REPAIR DAMAGED SIDE SEWERS AT OWN EXPENSE AS FOLLOWS:

-VITRIFIED CLAY: RE-SECTIONED WITH PVC PIPE SPOOL AND FLEXIBLE FERNCO COUPLINGS

-CONCRETE: RE-SECTIONED WITH ROMAC SADDLE

-PVC: RE-SECTIONED WITH RIGID COUPLINGS OR A ROMAC SADDLE

GENERAL NOTES

1. ALL NEW WATER PIPE AND FITTINGS SHALL HAVE A FOAM PIPE PIG RUN THROUGH THEM BEFORE BEING FLUSHED, DISINFECTED, AND PRESSURE TESTED. THE CONTRACTOR SHALL NOTIFY THE CITY OF RENTON WATER MAINTENANCE DEPARTMENT TWO WEEKS BEFORE MAKING A CUT-IN CONNECTION TO AN EXISTING WATER MAIN AND 5 DAYS BEFORE MAKING A CONNECTION TO A NEWLY CUT-IN TEE AND VALVE(S) ON THE EXISTING MAIN. ALL PIPE AND FITTINGS NOT TO BE DISINFECTED IN PLACE SHALL BE SWABBED WITH 1% CHLORINE SOLUTION PRIOR TO INSTALLATION.
2. AFTER DISINFECTING THE WATERMAIN, DISPOSE OF CHLORINATED WATER BY DISCHARGING TO THE NEAREST OPERATING SANITARY SEWER.
3. DEFLECT THE WATERMAIN ABOVE OR BELOW EXISTING UTILITIES AS REQUIRED TO MAINTAIN 3FT MINIMUM COVER, 12 IN. MINIMUM VERTICAL CLEARANCE BETWEEN UTILITIES UNLESS OTHERWISE SPECIFIED.
4. ALL FITTINGS SHALL BE BLOCKED PER CITY OF RENTON STANDARD DETAILS UNLESS OTHERWISE NOTED.

RECOMMENDED FOR APPROVAL

BY _____

BY _____

BUSH, ROED & HITCHINGS, INC.
CIVIL ENGINEERS & LAND SURVEYORS
2009 MINOR AVE. EAST
SEATTLE, Washington
98102-3513
(206) 323-4144
1-800-935-0508
FAX# (206) 323-7135
E-MAIL: info@brhinc.com

ANDREW V. WEIGAND — STATE OF WASHINGTON — 44863 — REGISTERED PROFESSIONAL ENGINEER — 9/6/2013

NO.	REVISION	BY	DATE	APPR

SURVEYED: BRH
DESIGNED: AW
DRAWN: AW
CHECKED: AW, AG
APPROVED: LH

SCALE: As Noted

ONE INCH AT FULL SCALE IF NOT ONE INCH SCALE ACCORDINGLY

VERTICAL: NAVD 1988
HORIZONTAL: NAD 1983/1991
DATUM

CITY OF RENTON
Planning/Building/Public Works Dept.

NE 5TH PL
WATER MAIN REPLACEMENT PROJECT
EDMONDS AVE / NE 5TH PL STA 44+00 to 48+80

DATE: 9-4-13
FIELDBOOK:
PAGE:
DRAWING NO: 2013009.00
SHEET: W-3 OF: 5

W-3673

W-367303

FILENAME: U:\LGV\2013009\DWG\VS-SUR.dwg

WTR-27-3673
WATER MAIN REPLACEMENT PROJECT
NE 5TH PL
Page 03

DRAWING NUMBER

SARGENT PRECAST, INC. • NEW HOPE, MINNESOTA
PRECAST BY PART NUMBER ROOF
THIS SIDE UP WHEN LIFTING

DRAWING NUMBER

WTR-27-3673

PROJECT NAME

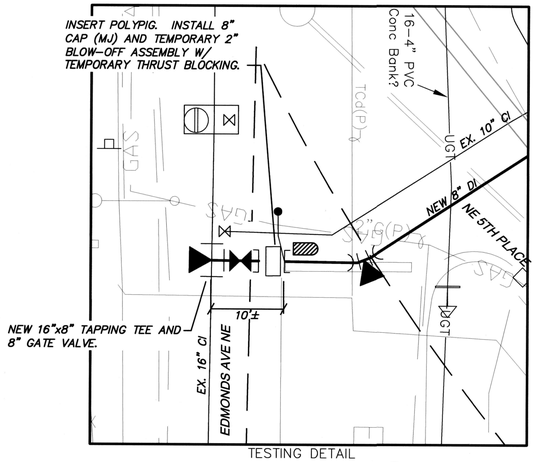

TESTING DETAIL

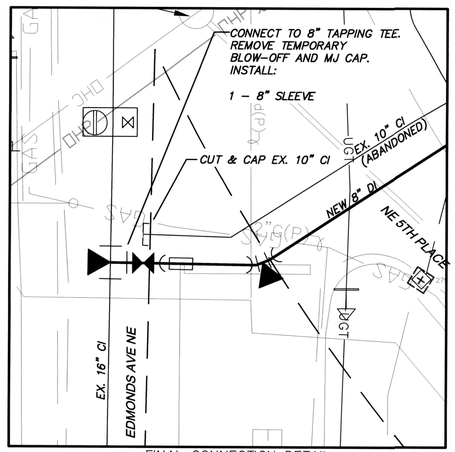

FINAL CONNECTION DETAIL

1 W1 W4 **CONNECTION DETAIL**
STA. 35+69.4
SCALE: 1"=10'

NORTH

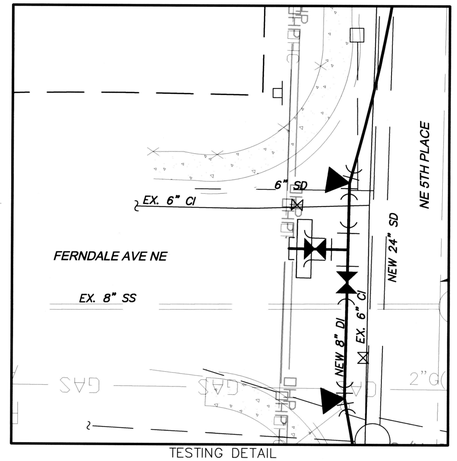

TESTING DETAIL

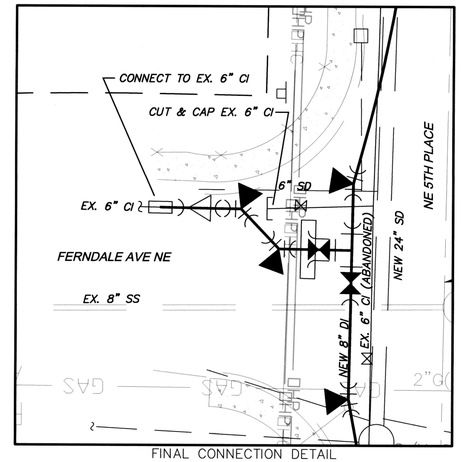

FINAL CONNECTION DETAIL

2 W2 W4 **CONNECTION DETAIL**
STA. 41+98.8
SCALE: 1"=10'

NORTH

TESTING DETAIL

FINAL CONNECTION DETAIL

3 W2 W4 **CONNECTION DETAIL**
STA. 43+10.3
SCALE: 1"=10'

NORTH

TESTING DETAIL

FINAL CONNECTION DETAIL

4 W3 W4 **CONNECTION DETAIL**
STA. 45+69.3
SCALE: 1"=10'

NORTH

RECOMMENDED FOR APPROVAL

BY _____

BY _____

ANDREW V. WESTLAKE — STATE OF WASHINGTON — 44863 — REGISTERED PROFESSIONAL ENGINEER
9/4/2013

W-367304

BUSH, ROED & HITCHINGS, INC.
CIVIL ENGINEERS & LAND SURVEYORS
2009 MINOR AVE. EAST
SEATTLE, Washington
98102-3513
(206) 323-4144
1-800-935-0508
FAX# (206) 323-7135
E-MAIL: info@bhinc.com

NO.	REVISION	BY	DATE	APPR

SURVEYED: BRH
DESIGNED: AW
DRAWN: AW
CHECKED: AW, AG
APPROVED: LH

SCALE: As Noted
ONE INCH AT FULL SCALE IF NOT ONE INCH SCALE ACCORDINGLY

VERTICAL: NAVD 1988
HORIZONTAL: NAD 1983/1991
DATUM

CITY OF RENTON
Planning/Building/Public Works Dept.

NE 5TH PL
WATER MAIN REPLACEMENT PROJECT

EDMONDS AVE / NE 5TH PL WATER MAIN
CONNECTION DETAILS

DATE: 9-4-13
FIELDBOOK:
PAGE:
DRAWING NO: 2013009.00
SHEET: W-4 OF: 5

W-3673

FILENAME: U:\LDD\2013009\DWG\WS-SUR.dwg

WTR-27-3673
WATER MAIN REPLACEMENT PROJECT
NE 5th Pl
Page 04

DRAWING NUMBER

DRAWI

WTR-27-3673

PROJECT NAME

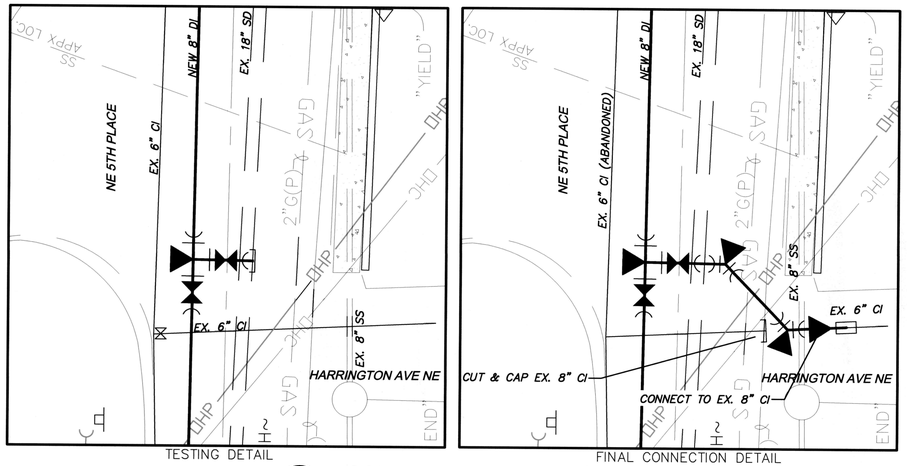

TESTING DETAIL

FINAL CONNECTION DETAIL

5 W3 W5 CONNECTION DETAIL
STA. 45+95.8
SCALE: 1"=10'

NORTH

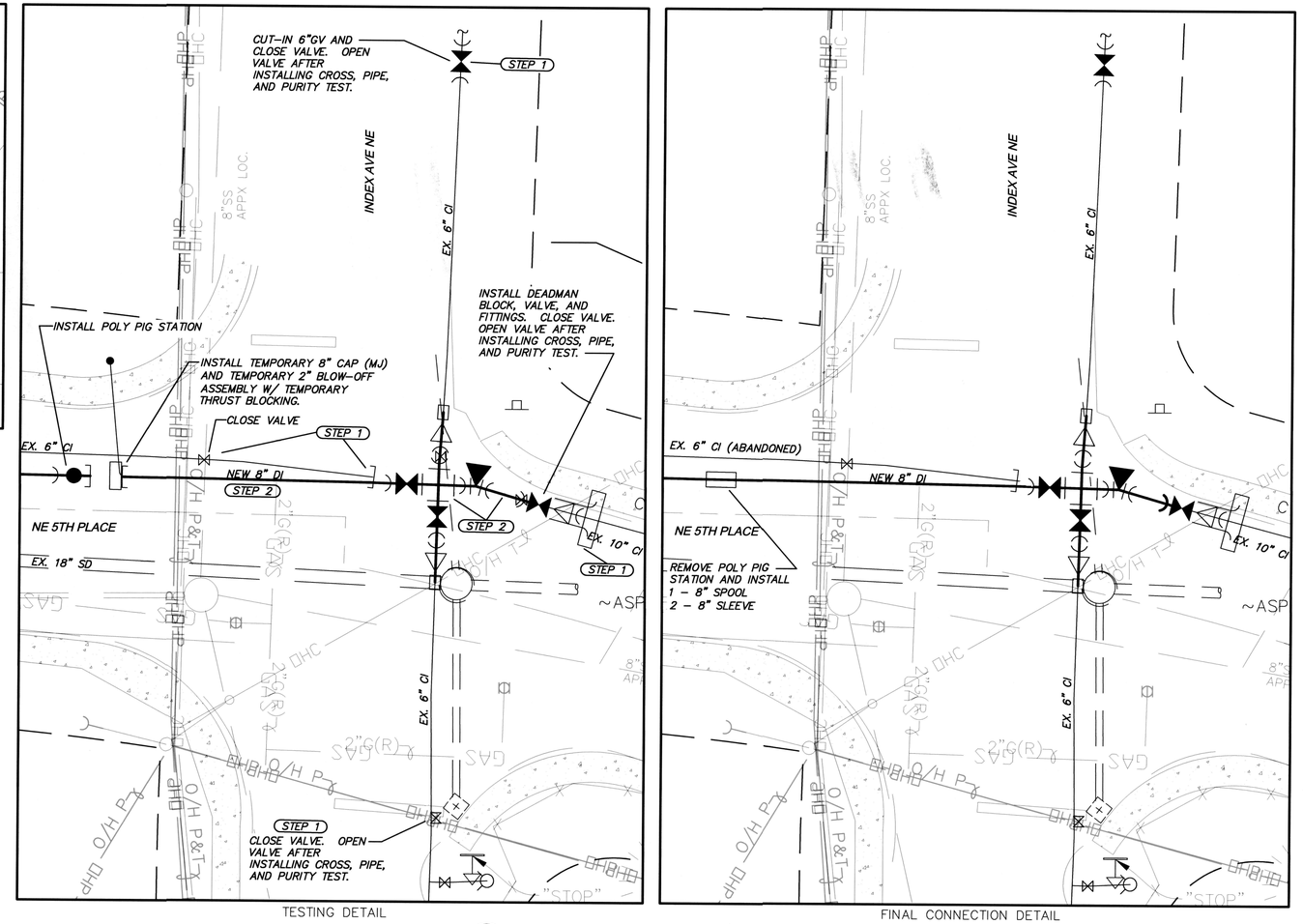

TESTING DETAIL

FINAL CONNECTION DETAIL

6 W3 W5 CONNECTION DETAIL
STA. 48+36.1
SCALE: 1"=10'

NORTH

W-367305

RECOMMENDED FOR APPROVAL
BY _____
BY _____

BUSH, ROED & HITCHINGS, INC.
CIVIL ENGINEERS & LAND SURVEYORS
2009 MINOR AVE. EAST
SEATTLE, Washington
98102-3513
(206) 323-4144
1-800-935-0508
FAX# (206) 323-7135
E-MAIL: info@brhinc.com

ANDREW V. WEYGANDT
STATE OF WASHINGTON
44863
REGISTERED PROFESSIONAL ENGINEER
9/6/2013

NO.	REVISION	BY	DATE	APPR

SURVEYED: BRH
DESIGNED: AW
DRAWN: AW
CHECKED: AW, AG
APPROVED: LH

SCALE: As Noted
ONE INCH AT FULL SCALE IF NOT ONE INCH SCALE ACCORDINGLY

VERTICAL: NAVD 1988
HORIZONTAL: NAD 1983/1991
DATUM

CITY OF RENTON
Planning/Building/Public Works Dept.

NE 5TH PL
WATER MAIN REPLACEMENT PROJECT

EDMONDS AVE / NE 5TH PL WATER MAIN
CONNECTION DETAILS

DATE: 7-25-13
FIELDBOOK:
PAGE:
DRAWING NO: 2013009.00
SHEET: W-5 OF: 5

W-3673

FILENAME: U:\LDD\2013009\DWG\XS-SUR.dwg

WTR-27-3673
WATER MAIN REPLACEMENT PROJECT
NE 5th Pl
Page 05

DRAWING NUMBER

DRAWING NUMBER

DRAWI

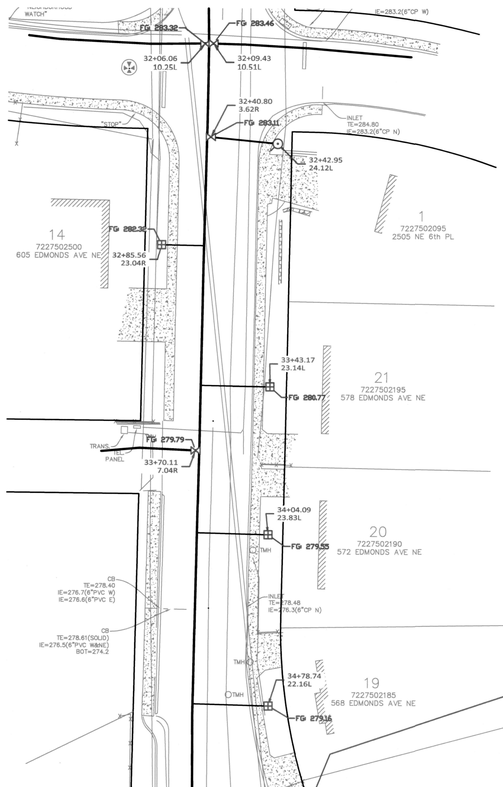

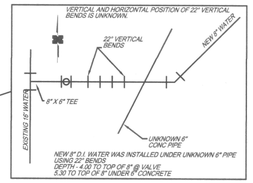

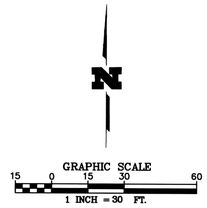

AMERICAN SURVEYING & ENGINEERING, LLC CONDUCTED THE FINAL ASBUILT SURVEY JULY 24, 2014 AND PREPARED THE FINAL RECORD DRAWINGS BASED ON A COMBINATION OF DATA COLLECTED FROM SAID FIELD SURVEY AND THE REDLINE AS-BUILT MARKUPS TAKEN FROM R.L. ALIA'S RED PENCIL MARKUPS OF THE ONSITE CONSTRUCTION PLAN SET PROVIDED BY THE CONSTRUCTION CONTRACTOR. THE INFORMATION SHOWN ON THESE DRAWINGS REFLECTS THE AS-CONSTRUCTED DATA AT THE TIME OF SURVEY AND SHOULD BE FIELD VERIFIED FOR ANY FUTURE USE. ALL POSITIONS MARKED ON THIS ASBUILT DRAWING WITH ENGINEERS STATION AND OFFSET WAS FIELD LOCATED ON JULY 24, 2014.

No.	Revisions	Date	By

Date: JUNE 12, 2014
Scale: 1 In = 30 Ft
Drafter: MLS
Surveyors: BMG/RCA
Reviewer:

American Surveying & Engineering, LLC
Land Surveyors • Consultants
2827 152nd Ave. N.E.
Redmond, WA 98052
PHONE (425) 881-7430 Fax (425) 881-7731
www.amerlscon-engineering.net
File path & Name
P:\Projects\2013\1345\Survey\Dwg's\1345_WaterMainAsBuilt.dwg

JULY 25 2014
MICHAEL LEE SIOLIN
STATE OF WASHINGTON
45177
REGISTERED PROFESSIONAL LAND SURVEYOR

AS-BUILT SURVEY

CITY OF RENTON NE 5TH PLACE
EDMONDS AVE NE WATER SYSTEM
IMPROVEMENT PROJECT SWP-27-2306

ASE Job No.
1345

SHEET
1 of 2

DRAWING NUMBER
WTR-27-3673
WATER MAIN REPLACEMENT PROJECT
NE 5TH PL
Page 06

DRAWING NUMBER
SHEET 1 OF 2 SHEETS • NEW HOPE, MINNESOTA
REORDER BY PART NUMBER 55052

DRAWING NUMBER
SHEET 1 OF 2 SHEETS • NEW HOPE, MINNESOTA
REORDER BY PART NUMBER 55052

7/28/2014

Last Saved By: MSjolin Jul 28, 2014 - 8:03am

AMERICAN SURVEYING & ENGINEERING, LLC CONDUCTED THE FINAL ASBUILT SURVEY JULY 24, 2014 AND PREPARED THE FINAL RECORD DRAWINGS BASED ON A COMBINATION OF DATA COLLECTED FROM SAID FIELD SURVEY AND THE REDLINE AS-BUILT MARKUPS TAKEN FROM R.L. ALIA'S RED PENCIL MARKUPS OF THE ONSITE CONSTRUCTION PLAN SET PROVIDED BY THE CONSTRUCTION CONTRACTOR. THE INFORMATION SHOWN ON THESE DRAWINGS REFLECTS THE AS-CONSTRUCTED DATA AT THE TIME OF SURVEY AND SHOULD BE FIELD VERIFIED FOR ANY FUTURE USE. ALL POSITIONS MARKED ON THIS ASBUILT DRAWING WITH ENGINEERS STATION AND OFFSET WAS FIELD LOCATED ON JULY 24, 2014.

GRAPHIC SCALE
15 0 15 30 60
1 INCH = 30 FT.

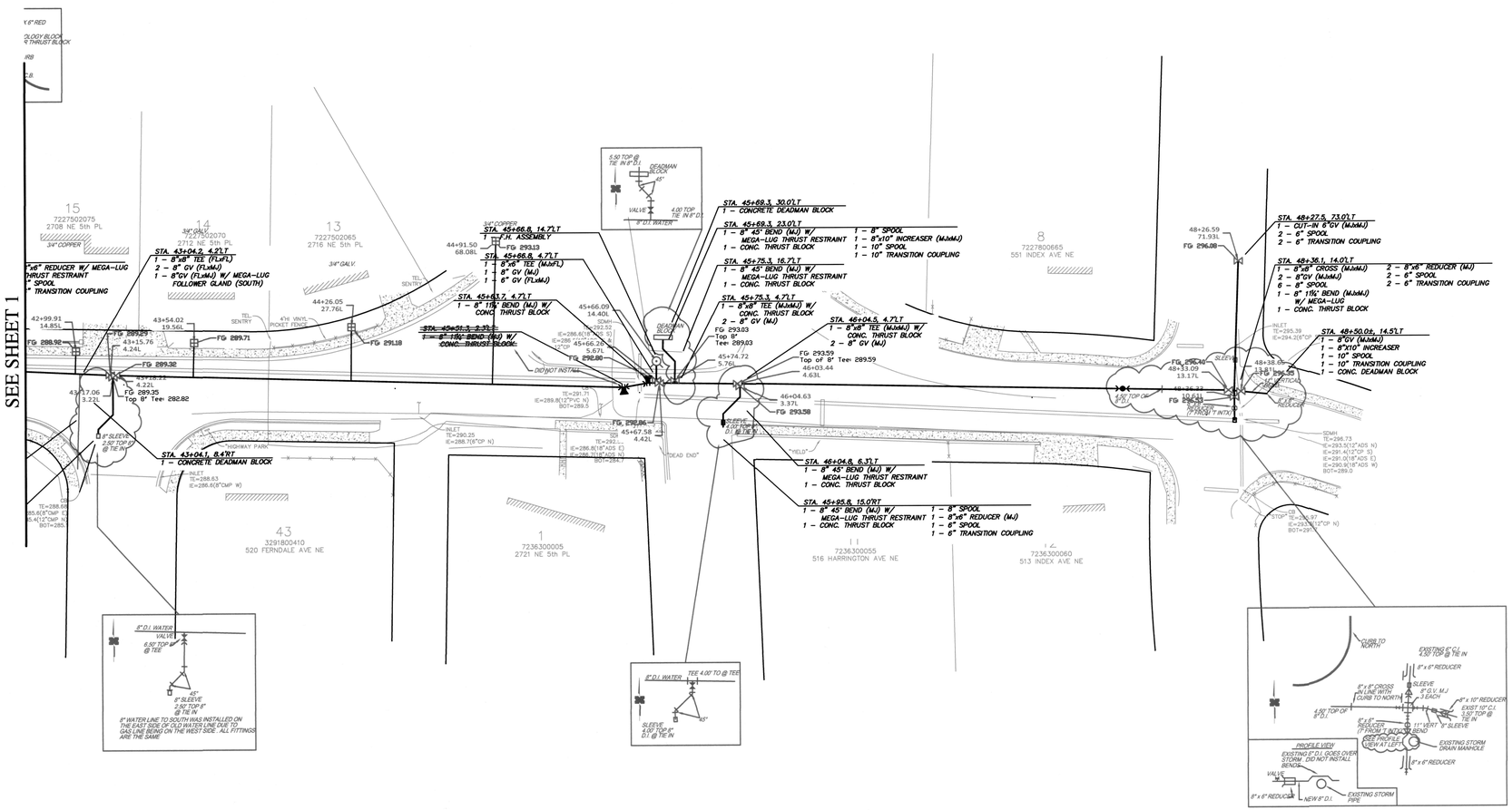

W-367307

Land Surveyors • Consultants
American Surveying & Engineering, LLC
2827 152nd Ave. N.E.
Redmond, WA 98052
PHONE (425) 881-7430 Fax (425) 881-7731
www.american-engineering.net
File path & Name
P:\Projects\2013\1345\Survey\Dwg\1345-RecordAsBuilt.dwg

No.	Revisions	Date	By

Date: JULY 25, 2014
Scale: 1 in = 30 Ft
Drafter: MLS
Surveyors: RKD/RCA
Reviewer:

MICHAEL LEE SJOLIN — WASHINGTON — 45174 — REGISTERED PROFESSIONAL LAND SURVEYOR — July 25, 2014

AS-BUILT SURVEY

CITY OF RENTON NE 5TH PLACE
EDMONDS AVE NE WATER SYSTEM
IMPROVEMENT PROJECT SWP-27-2306

ASE Job No. 1345

SHEET 2 of 2

WTR-27-3673
WATER MAIN REPLACEMENT PROJECT
NE 5TH PL
Page 07

DRAWING NUMBER

SHEET CONTENTS: RECORD AS-BUILT DRAWINGS

SAVED: 7/28/2014
Path: P:\Projects\2013\1345\Survey\Dwg\1345-RecordAsBuilt.dwg, Layout: AS-BUILT, Xrefs: 1345-RecordAsBuilt.dwg, 1345-Xref-Topo.dwg, 1345-Xref-Boundary.dwg, Image: P:\Projects\2013\1345\Survey\Dwg\1345-RecordAsBuilt.jpg
Last Saved By: MSjolin Jul 28, 2014 - 8:03am

PPP-SS-TTTT

PROJECT NAME

SITE BENCH MARKS

BENCH MARK "A"
NAIL IN S. FACE P.P. N. SIDE INTX.
N.E. 5th PL. & HARRINGTON AVE. N.E.
ELEV.=295.05

BENCH MARK "B"
TOP CTR. BOLT F.H. N.W.C. INTX. N.E.
5th PL. & FERNDALE AVE. N.E.
ELEV =291.51

BENCH MARK "C"
NAIL IN N.E. FACE P.P. IN MEDIAN AT
INTX. N.E. 5th PL. & EDMONDS AVE. N.E.
ELEV.=283.46

BENCH MARK "D"
NAIL IN N.E. FACE P.P. AT S.W.C. INTX.
CAMAS AVE. N.E. & N.E. EDMONDS AVE. N.E.
ELEV=284.03

BENCH MARK "E"
NAIL IN N.E. FACE P.P. AT W. SIDE CAMAS AVE.
N.E. BETWEEN #613 & #617 CAMAS AVE. N.E.
ELEV=268.20

BENCH MARK "F"
N.E. BONNET BOLT F.H. S. SIDE BLAIN AVE. N.E.
W. SIDE OF CAMAS AVE. N.E.
ELEV=256.67

BENCH MARK "G"
TOP CTR. BOLT F.H. AT N. SIDE N.E. 6th PL.
IN FRONT OF 2220 N.E. 6th PL.
ELEV=249.49

BENCH MARK "H"
RR SPIKE IN N. FACE P.P. S. SIDE N.E. 6th PL.
IN FRONT OF 2205 N.E. 6th PL.
ELEV=222.97

BENCH MARK "J"
RR SPIKE IN N.W. FACE P.P. AT S.W.C.
N. 7th ST. & ABERDEEN AVE. N.E.
ELEV=213.85

BENCH MARK "K"
TOP CTR. BOLT F.H. AT S.E.C. 5th PL. N.E.
& INDEX AVE. N.E.
ELEV=298.77

VICINITY MAP
SCALE: 1"=1000'±

20 0 10 20

(IN FEET)
1 inch = 20 ft.

LEGEND

ADS	PLASTIC PIPE	IE	INVERT ELEVATION
⊕	AREA DRAIN		FIRE DEPT. CONNECTION (FDC)
ABAN/RET	ABANDONED/RETIRED		LIGHT POLE (METAL)
	ASPHALT (ASPH)		LIGHT POLE (WOOD)
	BRICK SURFACE		LIGHT POLE (ORNAMENTAL)
	BUILDING LINE	LSCAPE	LANDSCAPE PLANTER
BC	BUILDING CORNER		MANHOLE
o	BOLLARD	O/H	OVERHEAD
	CANOPY	O/H P&T	OVERHEAD POWER/TELEPHONE
	CATCH BASIN (CB)	PL	PROPERTY LINE
	CONCRETE SURFACE (CONC)	(P)	PAINTED UTILITY LOCATION
CW/BW	CONCRETE/BRICK WALK	PPS	PARKING PAY STATION
CRW	CONCRETE RETAINING WALL	PIV	POST-INDICATOR VALVE
CC/XC	CONCRETE/EXTRUDED CURB	PS/PSS	COMBINED/SANITARY SEWER
CP/IP	CONC./IRON PIPE	PSD	PIPE STORM DRAIN
	CHAIN LINK FENCE (CLF)		PRIVATE CATCH BASIN
CTV	CABLE TV		GRAVEL SURFACE
COL	COLUMN		ROCKERY
CS	CONC. STAIRS	RE	ROOF ELEVATION
	H/C PARKING SPACE	SCL/CL	SEATTLE CITY LIGHT HANDHOLE
CON	CONIFEROUS TREE	SD	SERVICE DRAIN (STORM)
DEC	DECIDUOUS TREE	SD/SSCO	STORM/SEWER CLEANOUT
DWY	DRIVEWAY	SSS	SANITARY SIDE SEWER (RECORD)
ECd	ELECTRICAL CONDUIT (BURIED)		SIGN/STREET NAME SIGN
℄/ML	CENTERLINE/MONUMENT LINE	TBM	TEMPORARY BENCHMARK
EHH	ELECTRICAL HANDHOLE	TCd	TELEPHONE CONDUIT (BURIED)
EM	ELECTRICAL METER	TV	TELEPHONE VAULT
EMH	ELECTRICAL MANHOLE	TMH	TELEPHONE MANHOLE
EV/ET	ELECTRICAL VAULT/TRANSFORMER	TS	TELEPHONE SENTRY
	FOUND MONUMENT IN CASE		TRAFFIC FLOW DIRECTION
	FIRE HYDRANT	TOE	TOE OF SLOPE
FFE	FINISHED FLOOR ELEVATION	TOP	TOP OF BANK
G	GAS MAIN	UPO	UTILITY POLE (WOOD)
GM	GAS METER	WV	WATER VAULT
	GAS VALVE	W	WATER MAIN
GV	GAS VAULT	WM	WATER METER
	GUY ANCHOR		WATER VALVE
			WATER GATE VALVE/ CHAMBER

WTR-27-3673
WATER MAIN REPLACEMENT PROJECT
NE 5th Pl
Page 08

DRAWING NUMBER

SAFCO PRODUCTS • NEW HOPE, MINNESOTA

W-367308

BUSH, ROED & HITCHINGS, INC.
CIVIL ENGINEERS & LAND SURVEYORS
2009 MINOR AVE. EAST
SEATTLE, Washington
98102-3513
(206) 323-4144
1-800-935-0508
FAX# (206) 323-7135
E-MAIL: info@brhinc.com

8/2/13

JAMES M. HARPER
STATE OF WASHINGTON
44634
REGISTERED
PROFESSIONAL LAND SURVEYOR

NO.	REVISION	BY	DATE	APPR

SURVEYED: BRH
DESIGNED:
DRAWN: JAL
CHECKED: JMH
APPROVED:

SCALE: 1"=20'

ONE INCH AT FULL SCALE IF NOT ONE INCH SCALE ACCORDINGLY

VERTICAL: NAVD 1988
HORIZONTAL: NAD 1983/1991
DATUM

CITY OF RENTON
Planning/Building/Public Works Dept.

TOPOGRAPHIC SURVEY
WATER MAIN REPLACEMENT PROJECT
ABERDEEN AVE. N.E., N.E. 6th PL., CAMAS AVE. N.E.
EDMONDS AVE. N.E & N.E. 5th PL.
RENTON, WASHINGTON

DATE: 4/13
FIELDBOOK:
PAGE:
DRAWING NO: 2013009.00
SHEET: S1 OF: 7

A-NNNNAA

FILENAME: U:\LDD\2013009\DWG\XS-SUR.dwg

PROJECT NAME

PPP-SS-TTTT

MATCH LINE
SEE SHT. 1

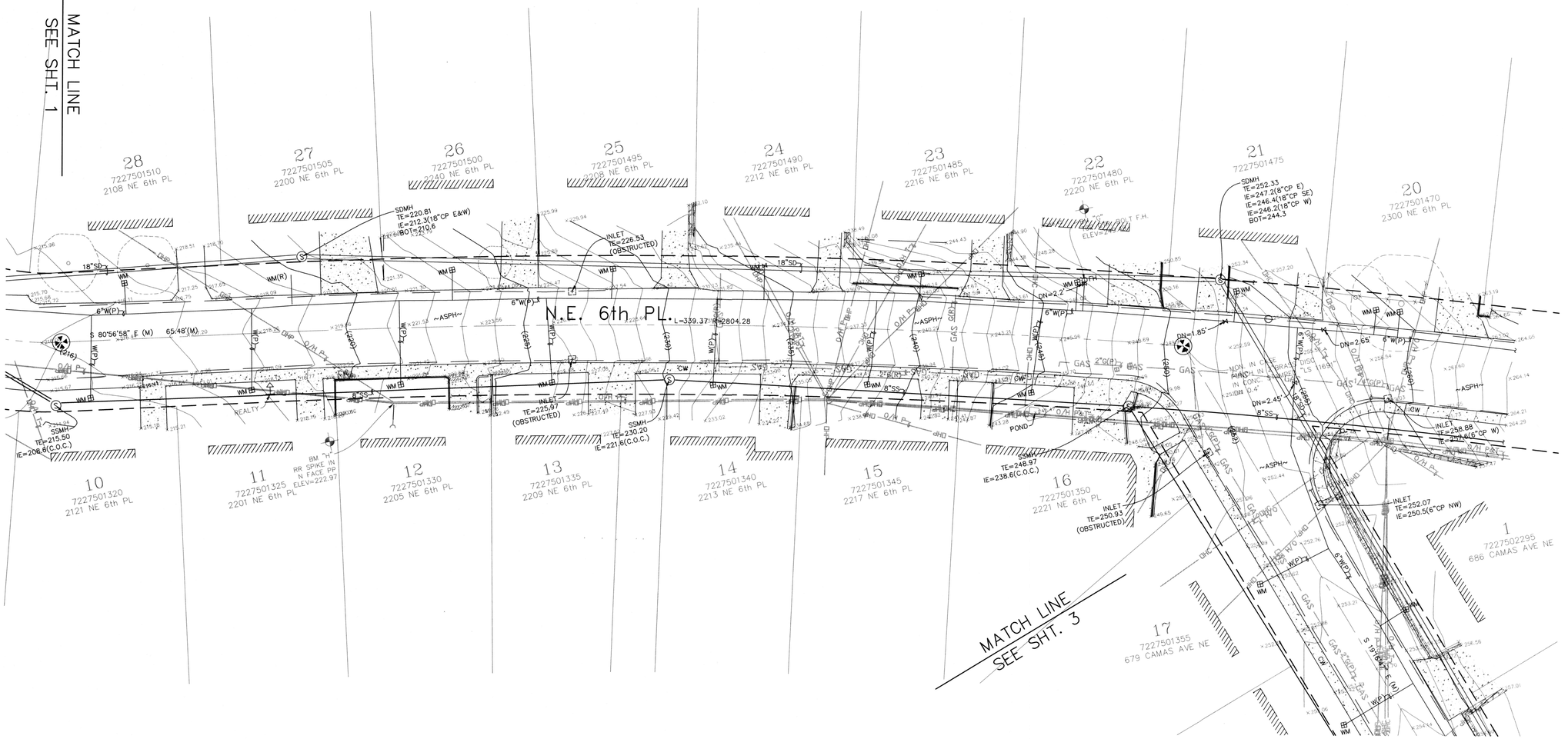

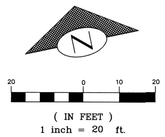

(IN FEET)
1 inch = 20 ft.

W-367309

BUSH, ROED & HITCHINGS, INC.
CIVIL ENGINEERS & LAND SURVEYORS
2009 MINOR AVE. EAST
SEATTLE, Washington
98102-3513
(206) 323-4144
1-800-935-0508
FAX# (206) 323-7135
E-MAIL: info@brhinc.com

8/2/13

JAMES M. HARPER — STATE OF WASHINGTON — 44634 — REGISTERED PROFESSIONAL LAND SURVEYOR

NO.	REVISION	BY	DATE	APPR

SURVEYED: BRH
DESIGNED:
DRAWN: JAL
CHECKED: JMH
APPROVED:

SCALE: 1"=20'
ONE INCH AT FULL SCALE IF NOT ONE INCH SCALE ACCORDINGLY

VERTICAL: NAVD 1988
HORIZONTAL: NAD 1983/1991
DATUM

CITY OF RENTON
Planning/Building/Public Works Dept.

TOPOGRAPHIC SURVEY
WATER MAIN REPLACEMENT PROJECT
ABERDEEN AVE. N.E., N.E. 6th PL., CAMAS AVE. N.E.
EDMONDS AVE. N.E. & N.E. 5th PL.
RENTON, WASHINGTON

DATE: 4/13
FIELDBOOK:
PAGE:
DRAWING NO: 2013009.00
SHEET: S2 OF 7

A-NNNNAA

FILENAME: I:\JOB\2013009\DWG\XS-SUR.dwg

DRAWING NUMBER
SAFCO PRODUCTS • NEW HOPE, MINNESOTA
REORDER BY PART NUMBER 60592

WTR-27-3673
WATER MAIN REPLACEMENT PROJECT
NE 5th Pl
Page 09

DRAWING NUMBER
SAFCO PRODUCTS • NEW HOPE, MINNESOTA
REORDER BY PART NUMBER 60592

PROJECT NAME

PPP-SS-TTTT

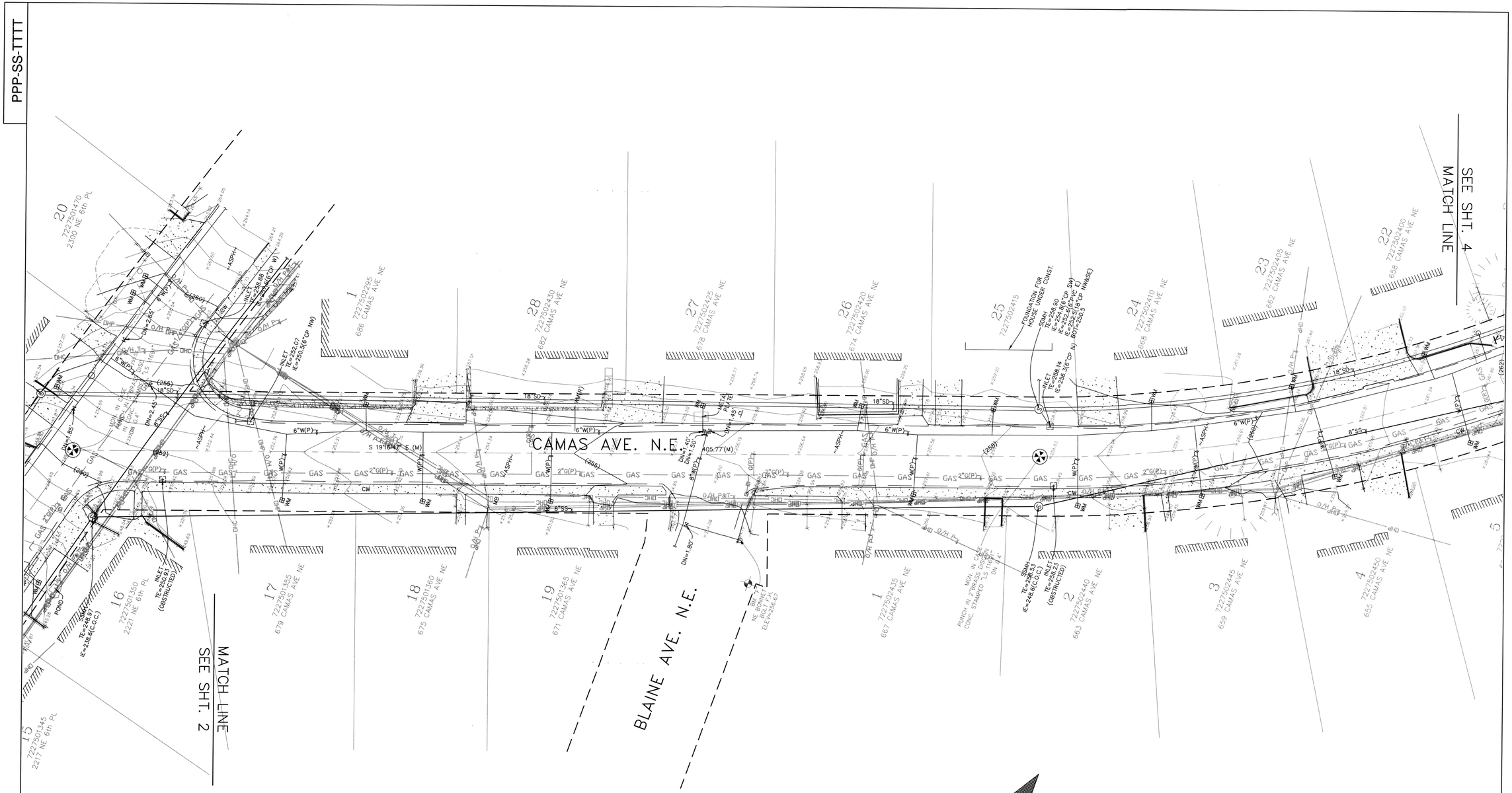

N

20 0 10 20

(IN FEET)
1 inch = 20 ft.

W-367310

BUSH, ROED & HITCHINGS, INC.
CIVIL ENGINEERS & SURVEYORS
2009 MINOR AVE. EAST
SEATTLE, Washington
98102-3513
(206) 323-4144
1-800-935-0508
FAX# (206) 323-7135
E-MAIL: info@brhinc.com

8/2/13
JAMES M. HARPER
STATE OF WASHINGTON
44654
REGISTERED
PROFESSIONAL LAND SURVEYOR

NO.	REVISION	BY	DATE	APPR

SURVEYED: BRH
DESIGNED:
DRAWN: JAL
CHECKED: JMH
APPROVED:

SCALE: 1"=20'
ONE INCH AT FULL SCALE IF NOT ONE INCH SCALE ACCORDINGLY

VERTICAL: NAVD 1988
HORIZONTAL: NAD 1983/1991
DATUM

CITY OF RENTON
Planning/Building/Public Works Dept.

TOPOGRAPHIC SURVEY
WATER MAIN REPLACEMENT PROJECT
ABERDEEN AVE. N.E., N.E. 6th PL., CAMAS AVE. N.E.
EDMONDS AVE. N.E. & N.E. 5th PL.
RENTON, WASHINGTON

DATE: 4/13
FIELDBOOK:
PAGE:
DRAWING NO: 2013009.00
SHEET: S3 OF: 7

A-NNNNAA

FILENAME: u:\L00\2013009\DWG\XS-SUR.dwg

DRAWING NUMBER
SAFCO PRODUCTS • NEW HOPE, MINNESOTA
REORDER BY PART NUMBER 15502

WTR-27-3673
WATER MAIN REPLACEMENT PROJECT
NE 5th Pl
Page 10

DRAWING NUMBER
SAFCO PRODUCTS • NEW HOPE, MINNESOTA
REORDER BY PART NUMBER 15502

DRAWING

PPP-SS-TTTT

PROJECT NAME

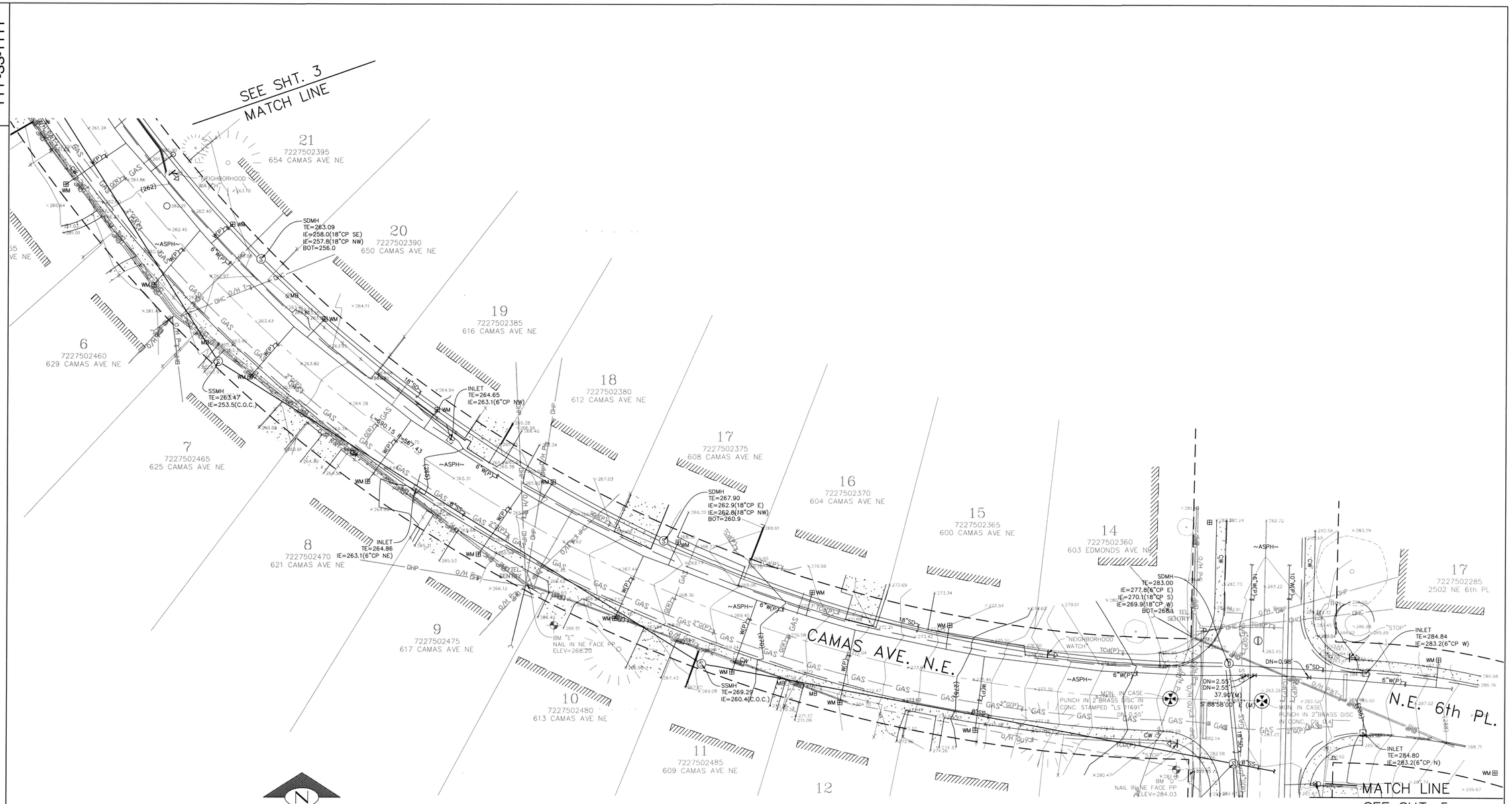

W-367311

8/2/13

BUSH, ROED & HITCHINGS, INC.
CIVIL ENGINEERS & LAND SURVEYORS
2009 MINOR AVE. EAST
SEATTLE, Washington
98102-3513
(206) 323-4144
1-800-935-0508
FAX# (206) 323-7135
E-MAIL: info@brhinc.com

JAMES M. HARPER
STATE OF WASHINGTON
44834
REGISTERED
PROFESSIONAL LAND SURVEYOR

NO.	REVISION	BY	DATE	APPR

SURVEYED: BRH
DESIGNED:
DRAWN: JAL
CHECKED: JMH
APPROVED:

SCALE: 1"=20'
ONE INCH AT FULL SCALE IF NOT ONE INCH SCALE ACCORDINGLY

VERTICAL: NAVD 1988
HORIZONTAL: NAD 1983/1991
DATUM

CITY OF RENTON
Planning/Building/Public Works Dept.

TOPOGRAPHIC SURVEY
WATER MAIN REPLACEMENT PROJECT
ABERDEEN AVE. N.E., N.E. 6th PL., CAMAS AVE. N.E.
EDMONDS AVE. N.E. & N.E. 5th PL.
RENTON, WASHINGTON

DATE: 4/13
FIELDBOOK:
PAGE:
DRAWING NO: 2013009.00
SHEET: S4 OF: 7

A-NNNNAA

FILENAME: U:\LDD\2013009\DWG\XS-SUR.dwg

NUMBER

DRAWING NUMBER

WTR-27-3673
WATER MAIN REPLACEMENT PROJECT
NE 5th Pl
Page 11

DRAWING N

PPP-SS-TTTT

PROJECT NAME

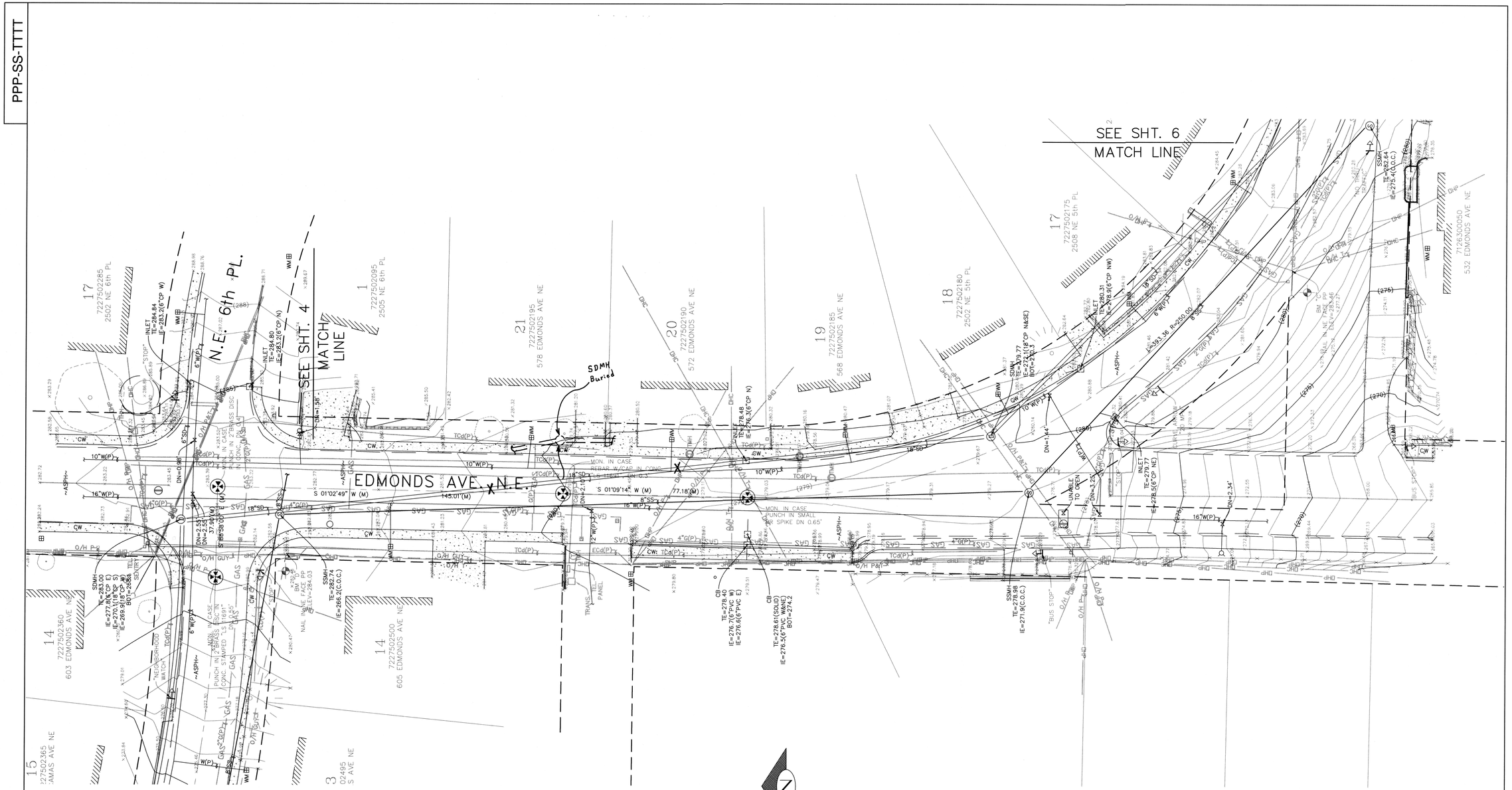

(IN FEET)
1 inch = 20 ft.

W-367312

BUSH, ROED & HITCHINGS, INC.
CIVIL ENGINEERS & LAND SURVEYORS
2009 MINOR AVE. EAST
SEATTLE, Washington
98102-3513
(206) 323-4144
1-800-935-0508
FAX# (206) 323-7135
E-MAIL: info@brhinc.com

8/2/13

JAMES M. HARPER — STATE OF WASHINGTON — 14834 — REGISTERED PROFESSIONAL LAND SURVEYOR

NO.	REVISION	BY	DATE	APPR
1	Add'd Buried SDMH	DWC	9-4-13	

SURVEYED: BRH
DESIGNED:
DRAWN: JAL
CHECKED: JMH
APPROVED:

SCALE: 1"=20'
ONE INCH AT FULL SCALE IF NOT ONE INCH SCALE ACCORDINGLY

VERTICAL: NAVD 1988
HORIZONTAL: NAD 1983/1991
DATUM

CITY OF RENTON
Planning/Building/Public Works Dept.

TOPOGRAPHIC SURVEY
WATER MAIN REPLACEMENT PROJECT
ABERDEEN AVE. N.E., N.E. 6th PL., CAMAS AVE. N.E.
EDMONDS AVE. N.E. & N.E. 5th PL.
RENTON, WASHINGTON

DATE: 4/13
FIELDBOOK:
PAGE:
DRAWING NO: 2013009.00
SHEET: S5 OF: 7

A-NNNNAA

FILENAME: U:\UD\2013009\DWG\XS-SURF.dwg

WTR-27-3673
WATER MAIN REPLACEMENT PROJECT
NE 5th Pl
Page 12

DRAWING NUMBER

DRAWING

PROJECT NAME

PPP-SS-TTTT

SEE SHT. 5
MATCH LINE

16
7227502170
2514 NE 5th PL

15
7227502165
2518 NE 5th PL

14
7227502160
2524 NE 5th PL

13
7227502155
2528 NE 5th PL

12
7227502150
2604 NE 5th PL

11
7227502145
2608 NE 5th PL

10
7227502140
2612 NE 5th PL

9
7227502135
551 FERNDALE AVE NE

16
7227502080
550 FERNDALE AVE NE

15
7227502075
2708 NE 5th PL

FERNDALE AVE. N.E.

N.E. 5th PL.

SDMH
TE=284.19
IE=277.5(18"CP E)
IE=277.4(18"CP W)
BOT=275.9

SSMH
82.64
(O.C.)

MON. IN CASE
PUNCH IN 2" BRASS DISC IN
CONC. STAMPED "LS 14634"
DN 0.3'

SSMH
TE=286.79
IE=277.1(C.O.C.)

INLET
TE=286.62
IE=285.0(8"CMP N)

CB
TE=287.07
IE=285.2
(10"CP SW)

BM "B"
TOP CTR. BOLT F.H.
ELEV=291.51

INLET
TE=288.76
IE=287.4(6"CP S)

SSMH
TE=288.09
493.83'(M)
IE=281.8(8"CP N)
IE=281.6(18"CP E)
IE=281.5(18"CP W)
BOT=279.8

SSMH
TE=288.29
IE=279.0(C.O.C.)

SSMH
TE=288.31
IE=279.2(C.O.C.)

INLET
TE=288.85
IE=287.6(6"CP S)

INLET
TE=288.13
IE=286.4(6"CMP W)

MON. IN CASE
DOMED 2" BRASS DISC
IN CONC., DN. 0.35'

CB
TE=288.68
IE=285.6(8"CMP E)
IE=285.4(12"CMP N)
BOT=285.1

S 88°58'39" E (M)

TRANS.

A
7126300061
2519 NE 5th PL

B

6
7126300060
2529 NE 5th PL

41
3291800400
2607 NE 5th PL

40
3291800390
2613 NE 5th PL

39
3291800380
2703 NE 5th PL

MATCH LINE — SEE SHT. 7

FERNDALE AVE. N.E.

N

20 0 10 20

(IN FEET)
1 inch = 20 ft.

W-367313

BUSH, ROED & HITCHINGS, INC.
CIVIL ENGINEERS & LAND SURVEYORS
2009 MINOR AVE. EAST
SEATTLE, Washington
98102-3513
(206) 323-4144
1-800-935-0508
FAX# (206) 323-7135
E-MAIL: info@brhinc.com

8/2/15
JAMES M. HARPER
STATE OF WASHINGTON
14634
REGISTERED
PROFESSIONAL LAND SURVEYOR

NO.	REVISION	BY	DATE	APPR

SURVEYED: BRH
DESIGNED:
DRAWN: JAL
CHECKED: JMH
APPROVED:

SCALE: 1"=20'
ONE INCH AT FULL SCALE IF NOT ONE INCH SCALE ACCORDINGLY

VERTICAL: NAVD 1988
HORIZONTAL: NAD 1983/1991
DATUM

CITY OF RENTON
Planning/Building/Public Works Dept.

TOPOGRAPHIC SURVEY
WATER MAIN REPLACEMENT PROJECT
ABERDEEN AVE. N.E., N.E. 6th PL., CAMAS AVE. N.E.
EDMONDS AVE. N.E. & N.E. 5th PL.
RENTON, WASHINGTON

DATE: 4/13
FIELDBOOK:
PAGE:
DRAWING NO: 2013009.00
SHEET: S6 OF: 7

A-NNNNAA

FILENAME: U:\JOD\2013009\DWG\XS-SUR.dwg

DRAWING NUMBER
SAFCO PRODUCTS • NEW HOPE, MINNESOTA
REORDER BY PART NUMBER 15052

WTR-27-3673
WATER MAIN REPLACEMENT PROJECT
NE 5th Pl
Page 13

PPP-SS-TTTT

PROJECT NAME

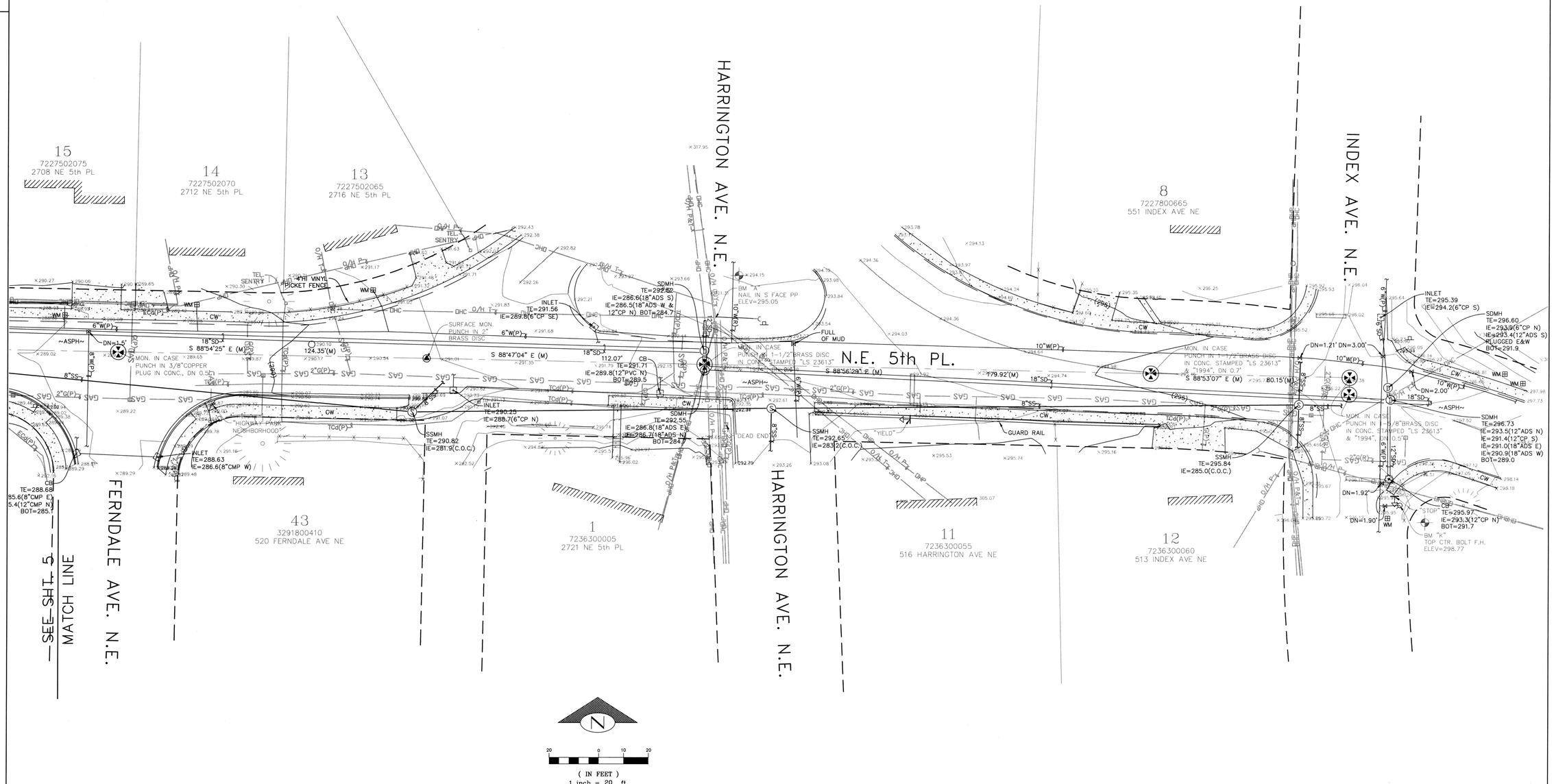

W-367314

BUSH, ROED & HITCHINGS, INC.
CIVIL ENGINEERS & LAND SURVEYORS
2009 MINOR AVE. EAST
SEATTLE, Washington
98102-3513
(206) 323-4144
1-800-935-0508
FAX# (206) 323-7135
E-MAIL: info@brhinc.com

8/2/13

JAMES M. HARPER
STATE OF WASHINGTON
44634
REGISTERED
PROFESSIONAL LAND SURVEYOR

NO.	REVISION	BY	DATE	APPR

SURVEYED: BRH
DESIGNED:
DRAWN: JAL
CHECKED: JMH
APPROVED:

SCALE: 1"=20'
ONE INCH AT FULL SCALE IF NOT ONE INCH SCALE ACCORDINGLY

VERTICAL: NAVD 1988
HORIZONTAL: NAD 1983/1991
DATUM

CITY OF RENTON
Planning/Building/Public Works Dept.

TOPOGRAPHIC SURVEY
WATER MAIN REPLACEMENT PROJECT
ABERDEEN AVE. N.E., N.E. 6th PL., CAMAS AVE. N.E.
EDMONDS AVE. N.E. & N.E. 5th PL.
RENTON, WASHINGTON

DATE: 4/13
FIELDBOOK:
PAGE:
DRAWING NO: 2013009.00
SHEET: S7 OF: 7

A-NNNNAA

DRAWING NUMBER

WTR-27-3673
WATER MAIN REPLACEMENT PROJECT
NE 5th Pl
Page 14

DRAWING

FILENAME: U:\LDD\2013009\DWG\XS-SUR.dwg

Path: P:\Projects\2013\1345\Survey\Dwg\S1345-AsBuilt-REV03.dwg (Storm AsBuilt) Aug 21, 2014-01:37:30pm MSjolin
Xref: | MLS-STAMP | x1345-BaseMap | Image: |

8/21/2014

GRAPHIC SCALE
15 0 15 30 60
1 INCH = 30 FT.

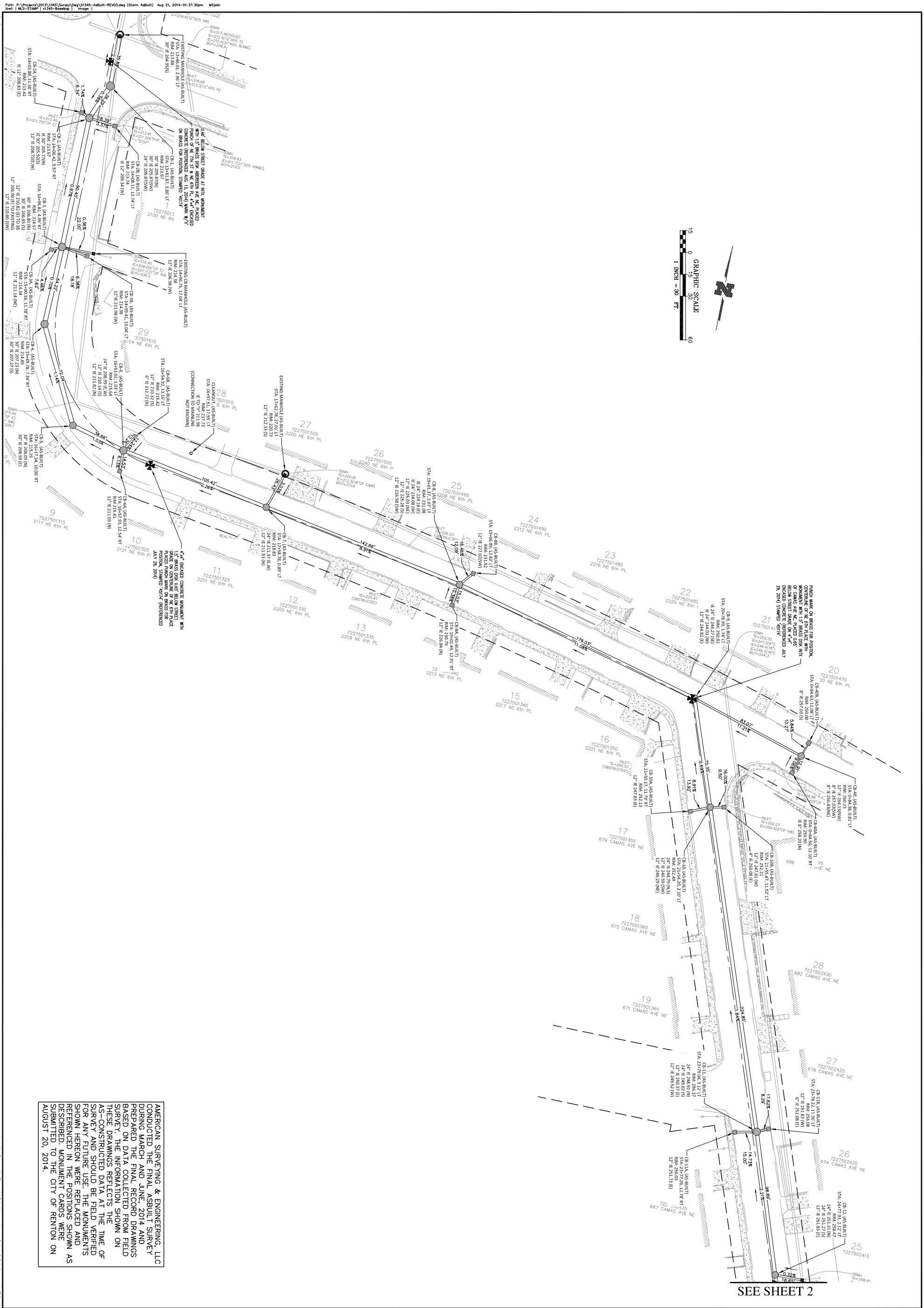

SEE SHEET 2

AMERICAN SURVEYING & ENGINEERING, LLC CONDUCTED THE FINAL ASBUILT SURVEY DURING MARCH AND JUNE, 2014 AND PREPARED THE FINAL RECORD DRAWINGS BASED ON DATA COLLECTED FROM FIELD SURVEY. THE INFORMATION SHOWN ON THESE DRAWINGS REFLECTS THE AS-CONSTRUCTED DATA AT THE TIME OF SURVEY AND SHOULD BE FIELD VERIFIED FOR ANY FUTURE USE. THE MONUMENTS SHOWN HEREON WERE REPLACED AND REFERENCED IN THE POSITIONS SHOWN AS DESCRIBED. MONUMENT CARDS WERE SUBMITTED TO THE CITY OF RENTON ON AUGUST 20, 2014.

Last Saved By: MSjolin Aug 21, 2014 - 1:36pm

AS-BUILT SURVEY

CITY OF RENTON NE 5TH PLACE
EDMONDS AVE NE STORM SYSTEM
IMPROVEMENT PROJECT SWP-27-2306

SHEET 1 of 3

ASE Job No. 1345

AUGUST 21, 2014
MICHAEL LEE SJOLIN
STATE OF WASHINGTON
A5174
REGISTERED PROFESSIONAL LAND SURVEYOR

American Surveying & Engineering, LLC
Land Surveyors • Consultants
2827 152nd Ave. N.E.
Redmond, WA 98052
PHONE (425) 881-7430 Fax (425) 881-7731
www.american-engineering.net

File path & Name
P:\Projects\2013\1345\Survey\Dwg\S1345-AsBuilt-REV03.dwg

Date:	AUGUST 25, 2014
Scale:	1 In = 30 Ft
Drafter:	MLS
Surveyors:	BMG/RCA
Reviewer:	

No.	Revisions	Date	By

Path: P:\Projects\2013\1345\Survey\Dwg\S1345-AsBuilt-REV03.dwg (Storm AsBuilt) Aug 21, 2014-01:39:08pm MSjolin
Xref: | MLS-STAMP | x1345-BaseMap | Image: |

8/21/2014

SEE SHEET 1

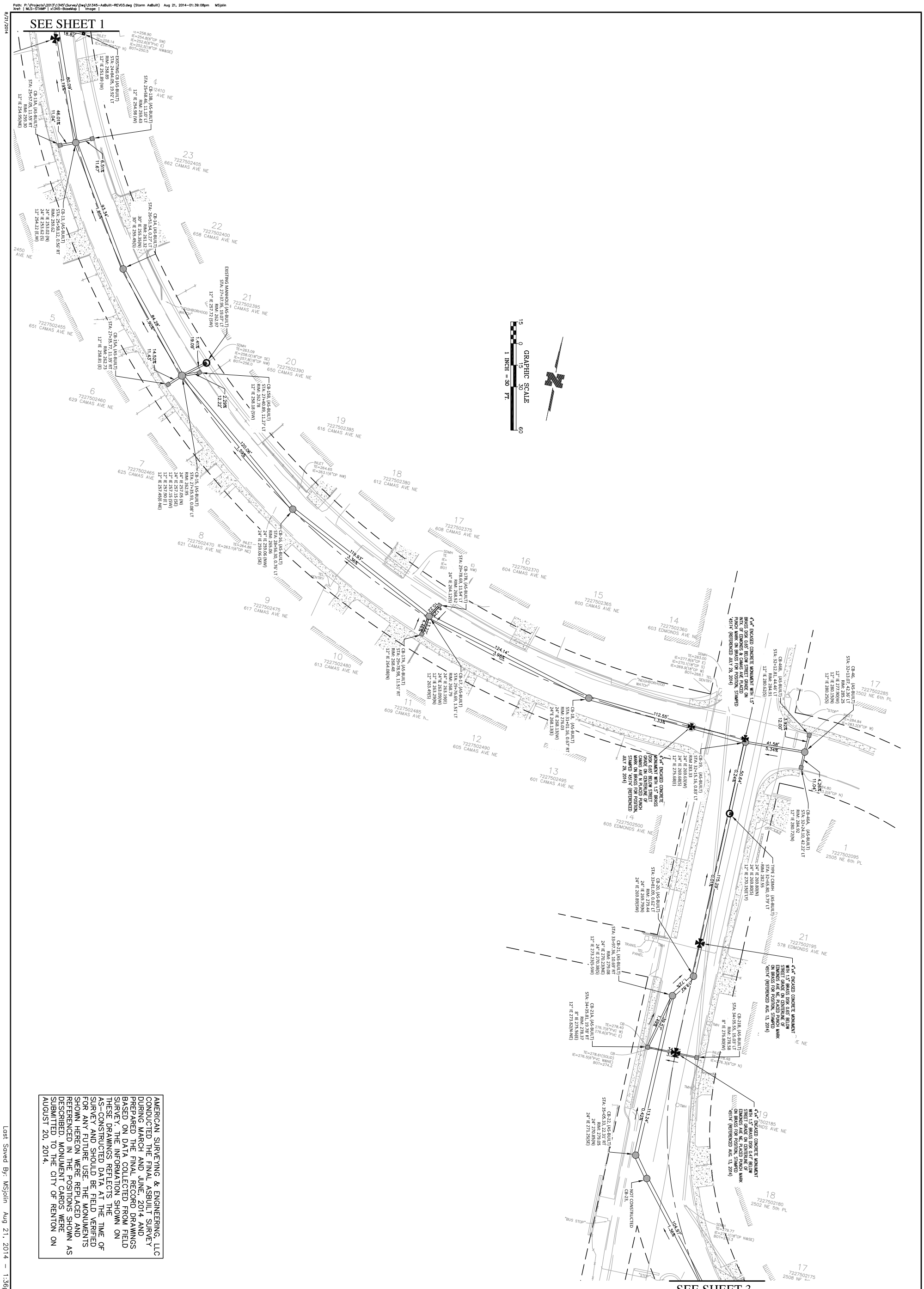

SEE SHEET 3

AMERICAN SURVEYING & ENGINEERING, LLC CONDUCTED THE FINAL ASBUILT SURVEY DURING MARCH AND JUNE, 2014 AND PREPARED THE FINAL RECORD DRAWINGS BASED ON DATA COLLECTED FROM FIELD SURVEY. THE INFORMATION SHOWN ON THESE DRAWINGS REFLECTS THE AS-CONSTRUCTED DATA AT THE TIME OF SURVEY AND SHOULD BE FIELD VERIFIED FOR ANY FUTURE USE. THE MONUMENTS SHOWN HEREON WERE REPLACED AND REFERENCED IN THE POSITIONS SHOWN AS DESCRIBED. MONUMENT CARDS WERE SUBMITTED TO THE CITY OF RENTON ON AUGUST 20, 2014.

AS-BUILT SURVEY

CITY OF RENTON NE 5TH PLACE
EDMONDS AVE NE STORM SYSTEM
IMPROVEMENT PROJECT SWP-27-2306

AUGUST 21, 2014
MICHAEL LEE SIOLIN
STATE OF WASHINGTON
45174
REGISTERED
PROFESSIONAL LAND SURVEYOR

American Surveying & Engineering, LLC
Land Surveyors • Consultants
2827 152nd Ave. N.E.
Redmond, WA 98052
PHONE (425) 881-7430 Fax (425) 881-7731
www.american-engineering.net

File path & Name
P:\Projects\2013\1345\Survey\Dwg\S1345-AsBuilt-REV03.dwg

Date:	AUGUST 25, 2014
Scale:	1 In = 30 Ft
Drafter:	MLS
Surveyors:	BMG/RCA
Reviewer:	

No.	Revisions	Date	By

ASE Job No. 1345

SHEET 2 of 3

Last Saved By: MSjolin Aug 21, 2014 - 1:36pm

Path: P:\Projects\2013\1345\Survey\Dwg\S1345-AsBuilt-REV03.dwg (Storm AsBuilt) Aug 21, 2014-01:40:33pm MSjolin
Xref: | MLS-STAMP | x1345-BaseMap | Image: |

8/21/2014

SEE SHEET 2

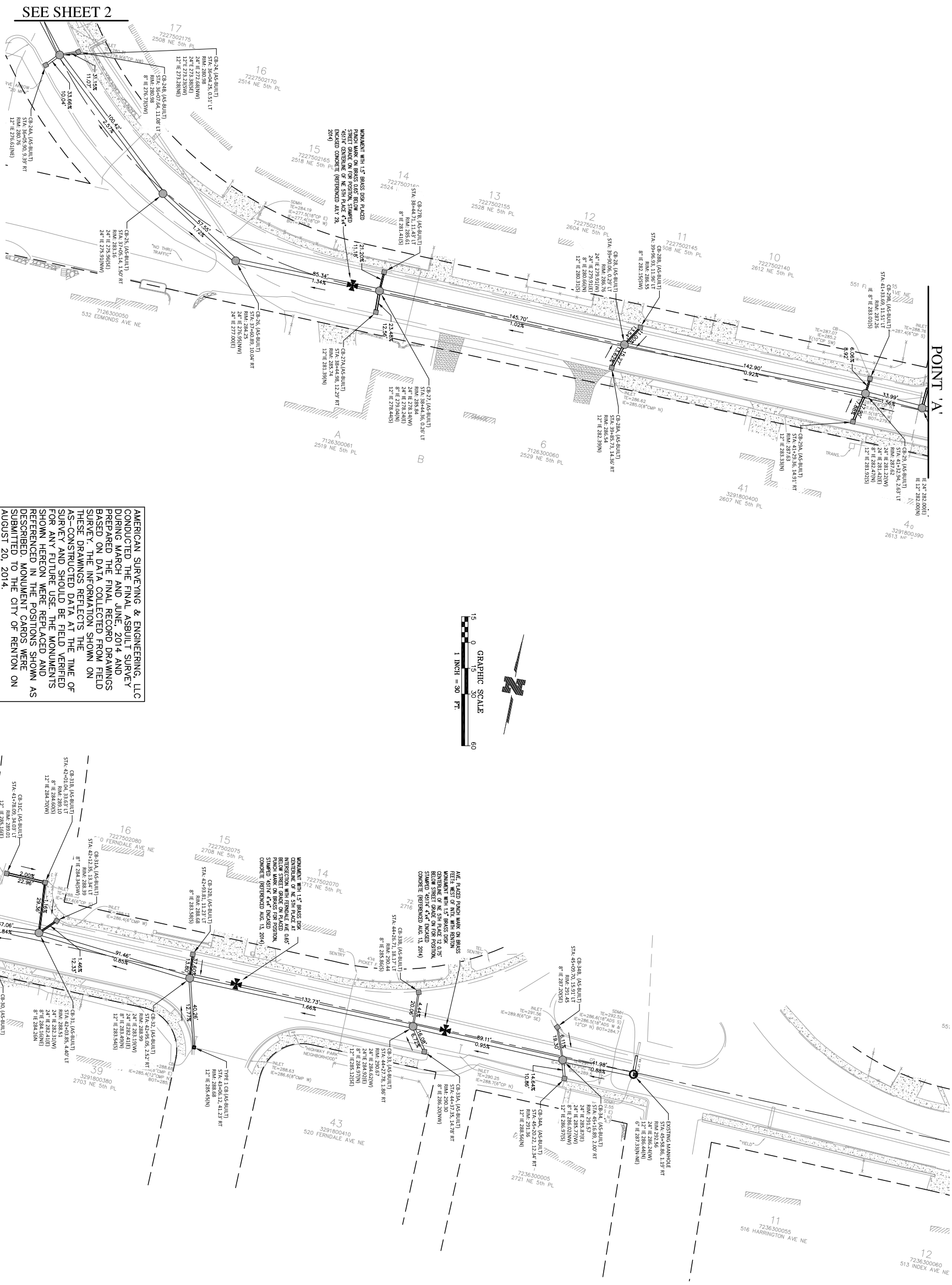

AMERICAN SURVEYING & ENGINEERING, LLC CONDUCTED THE FINAL ASBUILT SURVEY DURING MARCH AND JUNE, 2014 AND PREPARED THE FINAL RECORD DRAWINGS BASED ON DATA COLLECTED FROM FIELD SURVEY. THE INFORMATION SHOWN ON THESE DRAWINGS REFLECTS THE AS-CONSTRUCTED DATA AT THE TIME OF SURVEY AND SHOULD BE FIELD VERIFIED FOR ANY FUTURE USE. THE MONUMENTS SHOWN HEREON WERE REPLACED AND REFERENCED IN THE POSITIONS SHOWN AS DESCRIBED. MONUMENT CARDS WERE SUBMITTED TO THE CITY OF RENTON ON AUGUST 20, 2014.

Last Saved By: MSjolin Aug 21, 2014 - 1:36pm

AS-BUILT SURVEY

CITY OF RENTON NE 5TH PLACE
EDMONDS AVE NE STORM SYSTEM
IMPROVEMENT PROJECT SWP-27-2306

SHEET 3 of 3

ASE Job No. 1345

AUGUST 21, 2014
MICHAEL LEE SJOLIN
STATE OF WASHINGTON
45174
REGISTERED PROFESSIONAL LAND SURVEYOR

American Surveying & Engineering, LLC
Land Surveyors • Consultants
2827 152nd Ave. N.E.
Redmond, WA 98052
PHONE (425) 881-7430 Fax (425) 881-7731
www.american-engineering.net

File path & Name
P:\Projects\2013\1345\Survey\Dwg\S1345-AsBuilt-REV03.dwg

Date:	AUGUST 25, 2014
Scale:	1 In = 30 Ft
Drafter:	MLS
Surveyors:	BMG/RCA
Reviewer:	

No.	Revisions